Valve Model Compilation Methods
阀门型号编制方法

阀门的型号编制由7个单元组成，其含意如图所示：公称压力代号用阿拉伯数字表示，其数值是以兆帕(MPa)为单位的公称压力值的10倍，当阀门工作介质温度超过425°C, 采用最高工作温度和对应工作压力的形式标注，表示顺序依次为字母P, 下标标注工作温度(数值为最高工作温度的 1/10), 后标工作压力(MPa)的10倍，如$P_{54}100$。

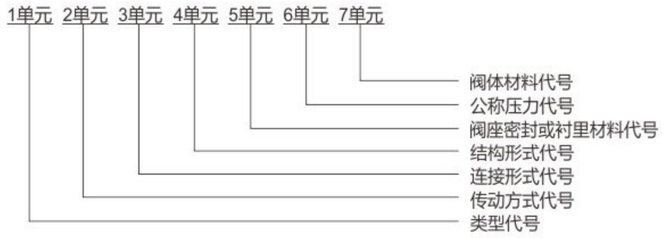

代　号		0	1	2	3	4	5	6	7	8	9
传动方式		电磁动	电磁-液动	电磁-液动	蜗轮	直齿轮	锥齿轮	气动	液动	气-液动	电动
连接形式			内螺纹	外螺纹		法兰		焊接	对夹	卡箍	卡套
类型代号		结构形式									
闸　阀	Z	明杆					暗杆				
		楔式			平行式		楔式		平行式		
		弹性闸板	刚性								
			单闸板	双闸板	单闸板	双闸板	单闸板	双闸板	单闸板	双闸板	
截止阀	J		直通式	Z型直通式	三通式	直角式	直流式	平衡			
节流阀	L							直通式	直角式		
球　阀	Q		浮动球					固定	球		
			直通式	Y型三通式		L形三通式	T形三通式	四通式	直通式		
蝶　阀	D	杠杆式	垂直板式		斜板式						
隔膜阀	G		屋脊式		截止式	直流板式		直通式	闸板式	Y形角式	T形角式
旋塞阀	X				填料式						静配
止回阀	H				直通式	T形三通式	四通式		L直通式	T形三通式	直通
安全阀	A		升降式			旋启式					蝶形
			直通式	立式		单瓣	双瓣	多瓣			
		弹簧									
		封闭			不封闭	封闭	不封闭				
		带散热片全启式	微启式	全启式	带板手		杆杆式	带控制机械	带板手		
					双弹簧微启式	全启式		全启式	微启式	全启式	
减压阀	Y		薄膜式	弹簧薄膜式	活塞式	波纹管式	杆杆式				
疏水阀	S			浮球式			钟形浮子式		双金属片式	脉冲式	圆盘式

密封面或衬里材料	代号	密封面或衬里材料	代号
铜合金	T	渗氮钢	D
橡胶	X	硬质合金	Y
尼龙塑料	N	衬胶	J
氟塑料	F	衬铅	Q
巴氏合金	B	搪瓷	C
合金钢	H	渗硼钢	P

代号	Z	T	C	K	Q
阀体材料	灰铸铁	铜合金	碳素钢	可锻铸铁	球墨铸铁

代号	I	C	P	R	V
阀体材料	15CrMo 1Cr5Mo C5	WCB 25 A105	1Cr18Ni9Ti ZG1Cr18Ni9Ti CF8(304) CF3(304L)	ZG1Cr18Ni12Mo2Ti CF8M(316) CF3M(316L)	12Cr1MoV ZG15CrMo1V ZG20CrMoV WC6 WC9

本方法适用于通用阀门产品，特殊可非标产品的型号编制方法按企业标准编制；产品设计更改，恕不另行通知。用户特殊要求，可在合同评审时注明。

Valve Model Compilation Methods
阀门型号编制方法

The model designation of the valves consists of seven units and their meanings are shown as the diagram below: Nominal pressure codes are indicated in Arabic numerals and their numerical values are ten times of nominal pressure values (unit: MPa). When the operation temperature of valve medium exceeds 425°C, applies the indication of both maximum operating temperature and its corresponding operating pressure, the order of the indication starts from P, its subscript marks its operating temperature (the value is shown as 1/10 of its maximum operating temperature), rear mark is the ten times of the operating pressure (unit: MPa), for example $P_{54}100$.

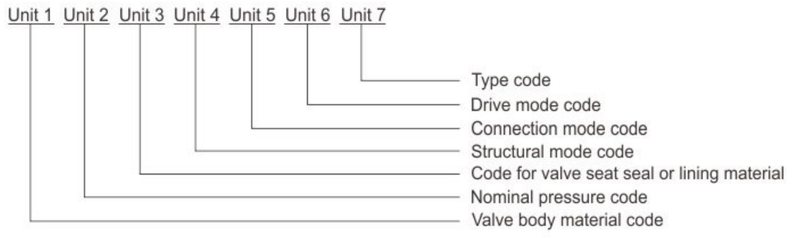

Code		0	1	2	3	4	5	6	7	8	9
Drive mode		EM	EM-HYD	EM-HYD	worm gear	spur gear	Bevel gear	Pneumatic	Hydraulic	Pneumatic-hydrodynamic	Electric
Connection			Internal thread	External thread		Flange		Welding	Wafer	Bar clasp	Tube fittings
Type code		Structure									
Gate valve	Z	Visible rod					Invisible rod				
		Wedge type		Parallel type			Wedge type		Parallel type		
		Elastic gate board	Rigidity								
			Single Disc	Double Disc	Single Disc	Double Disc	Single Disc	Double Disc	Single Disc	Double Disc	
Globe valve	J		Straight through	Z-straight through	3-way type	Vertical angle	Straight flow	Equilibrium			
Throttle valve	L							Straight-through	Vertical angle		
Ball valve	Q		Floating ball					Fix	Ball		
			Straight through	Y 3-way type		L 3-way type	T 3-way type	4-way type	Straight through		
Butterfly valve	D	Lever type	Vertical plate type		Tilted-plate						
Diaphragm valve	G		Roof ridge type		Cutoff type	Straight flow plate type		Straight-through	Flashboard	Y-angle	T-angle
Plug valve	X				Filling type						Static configuration
Check valve	H				Straight through	T-type tee	4-way type		L Straight through	T-type tee	Straight through
Safety valve	A		Lift type			Swing type					Butterfly shape
			Straight through	Vertical type		Single valve flap	Double valve flap	Multiple valve flap			
		Spring									
		enclosed			Unenclosed	enclosed	Unenclosed				Impulse type
		Full lift with heat sink	Fine startup	Full lift	With spanner		Lever type	control machinery	spanner		
					Double-spring inching	Full lift		Full lift	inching	Full lift	
PRV	Y		Diaphragm type	Spring diaphragm	Piston type	Corrugated pipe	Lever type				
steam trap	S			Floating ball type			Inerted bucket		Bimetallic sheet	Impulse type	Disk type

Seal surface or lining material	Code	Seal surface or lining material	Code
Copper alloy	T	Nitrided steel	D
Rubber	X	Hard alloy	Y
Nylon plastic	N	lined with rubber	J
Fluorine plastic	F	lined with lead	Q
Babbitt	B	Porcelain enamel	C
Alloy steel	H	Boron steel	P

Code	Z	T	C	K	Q
body material	Gray cast iron	Copper alloy	Carbon steel	Malleable iron	Ductile cast iron

Code	I	C	P	R	V
body material	15CrMo 1Cr5Mo C5	WCB 25 A105	1Cr18Ni9Ti ZG1Cr18Ni9Ti CF8(304) CF3(304L)	ZG1Cr18Ni12Mo2Ti CF8M(316) CF3M(316L)	12Cr1MoV ZG15CrMo1V ZG20CrMoV WC6 WC9

This method is applied to general—use valve products. Special non-standard models are compiled according to enterprise standards; Product design is subject to change without notice. If users have any special requests, please state them in the contract

序号	代号	标准名称	序号	代号	标准名称
1	GB/T 1047	管道元件 DN (公称尺寸)的定义和选用	23	JB/T 93	阀门零部件扳手、手柄和手轮
2	GB/T 1048	管道元件 PN (公称压力)的定义和选用	24	JB/T 106	阀门的标志和涂漆
3	GB/T 12224	钢制阀门 一般要求	25	GB/T32808	阀门型号编制方法
4	GB/T 12226	通用阀门 灰铸铁件技术条件	26	JB/T 1700	阀门零部件 螺母、螺栓和螺塞
5	GB/T 12225	通用阀门 铜合金铸件技术条件	27	JB/T 1702	阀门零部件 轴承压盖
6	GB/T 12227	通用阀门 球墨铸铁件技术条件	28	JB/T 1703	阀门零部件 衬套
7	GB/T 12228	通用阀门　碳素钢锻件技术条件	29	JB/T 1712	阀门零部件 填料和填料垫
8	GB/T 12229	通用阀门 碳素钢铸件技术条件	30	JB/T 1718	阀门零部件 垫片和止动垫圈
9	GB/T 12232	通用阀门 法兰连接铁制闸阀	31	JB/T 1726	阀门零部件 阀瓣盖和对开圆环
10	GB/T 12233	通用阀门 铁制截止阀与升降式止回阀	32	JB/T 1741	阀门零部件 顶心
11	GB/T 12234	石油、天然气工业用螺柱连接阀盖的钢制闸阀	33	JB/T 1754	阀门零部件 接头组件
12	GB/T 12235	石油、石化及相关工业用钢制 截止阀和升降式止回阀	34	NB/T 47044	电站阀门
13	GB/T 12236	石油、石化及相关工业用钢制旋启式止回阀	35	JB/T 5208	阀门零部件 隔环
14	GB/T 12238	法兰和对夹连接弹性密封蝶阀	36	JB/T 5211	阀门零部件 闸阀阀座
15	GB/T 13927	工业阀门 压力试验	37	JB/T 5300	工业用阀门材料 选用导则
16	GB/T 21465	阀门 术语	38	JB/T 6902	阀门液体渗透检测
17	GB/T 22652	阀门密封面堆焊工艺评定	39	JB/T 8858	闸阀 静压寿命试验规程
18	GB/T 6414	铸件 尺寸公差与机械加工余量	40	JB/T 8859	截止阀 静压寿命试验规程
19	ANSI	阀门美国国家标准	41	JB/T 8863	蝶阀 静压寿命试验规程
20	ASTM	美国材料试验协会阀门标准	42	JB/T 9092	阀门的检验与试验
21	MSS	美国阀门和管件制造厂标准化协会阀门标准	43	JB/T12000	火电超临界及超超临界参数 阀门用承压锻钢件技术条件
22	HG/T20592 -20635	欧洲体系美洲体系法兰标准	44	JB/T12001	火电超临界及超超临界参数阀门一般要求

注：表中为阀门主要零部件常用材质，可根据不同工况进行选配。

Commonly Used Standard Directory
上海电站阀门厂有限公司常用标准目录

No.	Code	Standard Name	No.	Code	Standard Name
1	GB/T 1047	Piping components dn (nominal size) of definition and selection	23	JB/T 93	Spare parts valve wrench, Handles and hand wheels
2	GB/T 1048	Piping components pn (nominal size) of definition and selection	24	JB/T 106	Valve logo and painted
3	GB/T 12224	Steel valve general requirements	25	JB/T 308	Valve model methodology
4	GB/T 12226	General valve gray iron castings technical conditions	26	JB/T 1700	Valve parts nut, bolt and plug
5	GB/T 12225	General valve copper alloy castings technical conditions	27	JB/T 1702	Valve parts bearing gland
6	GB/T 12227	General valve ductile iron castings technical conditions	28	JB/T 1703	valve spare parts bushing
7	GB/T 12228	General valve carbon steel forgings for technical conditions	29	JB/T 1712	Valve parts packing and packing pad
8	GB/T 12229	General valve carbon steel castings technical conditions	30	JB/T 1718	Valve parts gaskets and washers
9	GB/T 12232	General valve cast iron flanged gate valve	31	JB/T 1726	Valve parts valve cover and outside ring
10	GB/T 12233	General valve cast iron globe valve and lift check valve	32	JB/T 1741	Valve parts top heart
11	GB/T 12234	Oil, gas industry stud link steel valve bonnet	33	JB/T 1754	spare parts valve fittings
12	GB/T 12235	Petroleum, petrochemical and related industries with steel shutoff valve and lift check valve	34	NB/T 47044	Power station valve
13	GB/T 12236	Petroleum, petrochemical and related industries with steel swing check valve	35	JB/T 5208	Valve parts spacer rings
14	GB/T 12238	Flange and wafer connector elastic sealing butterfly valve	36	JB/T 5211	Valve parts valve seat
15	GB/T 13927	Industrial valves pressure test	37	JB/T 5300	Industrial valves materials selection guidelines
16	GB/T 21465	Valve terminology	38	JB/T 6902	Valve for liquid penetrant testing
17	GB/T 22652	Valve sealing surface surfacing technology evaluation	39	JB/T 8858	Gate valve hydrostatic life test procedures
18	GB/T 6414	Casting　dimensional tolerances and mechanical machining allowance	40	JB/T 8859	Shutoff valve hydrostatic life test procedures
19	ANSI	Valve american national standards	41	JB/T 8863	Butterfly valve hydrostatic life test procedures
20	ASTM	Astm standard valves	42	JB/T 9092	Valve inspection and test
21	MSS	USA standard valves valves and fittings factory standardization association	43	JB/T12000	Technical conditions of bearing steel forgings applicable for thermal power supercritical and ultra-supercritical valves
22	HG/T20592 -20635	European and American system flange standards	44	JB/T12001	General requirements for thermal power supercritical and ultra-supercritical valves

Note:Table for the main parts of the valve commonly used materials, according to different conditions for matching.

New Products Introduction-C12A
新产品简介-C12A

High Temperature High Pressure Welded Manual Gate Valve
高温高压焊接式手动闸阀





C12A用途

用C12A(P91)材料制造电站阀，使用与超超临界大功率火力发电厂的主蒸汽管路上，起到耐超高温，超高压的作用。

Application for C12A castings

Using C12A (P91) material manufacturing power station valve, main steam pipe using the Yu Chaochao critical power of thermal power plant, to high temperature resistant, ultra high pressure effect.

C12A化学成分　C12A Chemical Analysis:%

名称 Element	成分 Property	名称 Element	成分 Property
C	0.08-0.12	Ni	≤0.4
Si	≤0.60	Mo	0.85-1.05
Mn	0.30-0.60	V	0.18-0.25
P	≤0.03	Nb	0.06-1.00
S	≤0.01	N	0.03-0.07
Cr	8.0-10.0	A1	≤0.04

C12A机械性能　C12A Mechanical Property:

抗拉强度(MPa) UTS(MPa)	屈服强度(MPa) Yield(MPa)	延伸率(%) Elongation(%)	断面收缩(%) Reduction of Area(%)
585-760	≥413	≥20	≥45

合作单位

美标ASTM/A217　C12A标准超超临界钢阀门铸件及同材质产品目前我公司已可以投入大批量生产。经检测化学成分和机械性能完全符合ASTM/A217C12A标准。本公司已为众多用户提供阀门产品，并深受客户认可。

Cooperation

The standard ASTM/A217 C12A Supercritical steel valve castings and other castings with the same material are in batch production.The chemical analysis and mechanical property are in conformity withthe ASTM/A217C12A standard. The company has for many users with valve products, and approved by clients.

注：如有产品参数疑问请致电上海电站阀门有限公司详询，电话：021-59222288
Note: If the product parameters, please call our company detailed inquiry, Tel: 021-59222288

制造验收技术标准

1. 制造与验收技术条件按日本火力发电用阀门标准E101和NB/T47044的规定。
2. 结构长度按E101的规定或按用户提供尺寸。
3. 焊接坡口按电力工业管理标准78DG的规定或按用户提供尺寸。

Manufacture and Acceptance Standard

1. The manualture and aueptanle specification shan be based on the japanese standare E101 applied for the thermal powerand NB/T47044.
2. The lenglh shan bein line with E101 or by user's speeifica tion.
3. Welding groove shan be in auordanle with power industrth specification 78DG orhg user's specification.The size in inclose is old production's size.

主要性能和使用范围　Chirf Property and Scope Of Use

型号 model	公称压力 PN(MPa)	试验压力 Test pressure(MPa)		工作压力(MPa) Working pressure	工作温度(°C) Working temp	适用介质 Applicable medium
		强度试验 Strength test	密封试验/上密封试验 Seal test/back seal test			
Z96(1, 0, 2)Y-250	25	37.5	27.5	-	≤425	水、蒸汽 Water, steam
Z96(1, 0, 2)Y-320	32	48	36	-	≤425	
Z96(1, 0, 2)Y-P54100V	-	30	22	P5410	≤540	蒸汽 steam
Z96(1, 0, 2)Y-P54170V	-	48	36	P5417	≤540	

主要零件材料　Material Formain Parts

零件名称 Part name	材料牌号 Material grade		
阀体 Body	WCB	WC6	WC9
闸板 Disc	WCB	WC6	WC9
阀盖 Bonnet	25	12Cr1MoVA	
阀杆 Stem	2Cr13	25Cr2MoV	
阀座 Seat	25	12Cr1MoVA	
密封环 Sealing ring	S软钢(增强柔性石墨) Soft steel(Enhanced flexible graphite)	S软钢 Soft steel	F软钢 Soft steel
填料 Packing	增强柔性石墨 Enhanced flexible graphite		
支架 Yoke	WCB	WCB或WC6 WCB or WC6	
阀杆螺母 Stem nut	ZQA19-4		
四开环 4 Piece ring	12Cr1MoV	12Cr1MoV	

注：如有产品参数疑问请致电上海电站阀门有限公司详询，电话：021-59222288
Note: If the product parameters, please call our company detailed inquiry, Tel: 021-59222288

High Temperature High Pressure Welded Manual Gate Valve
高温高压焊接式手动闸阀

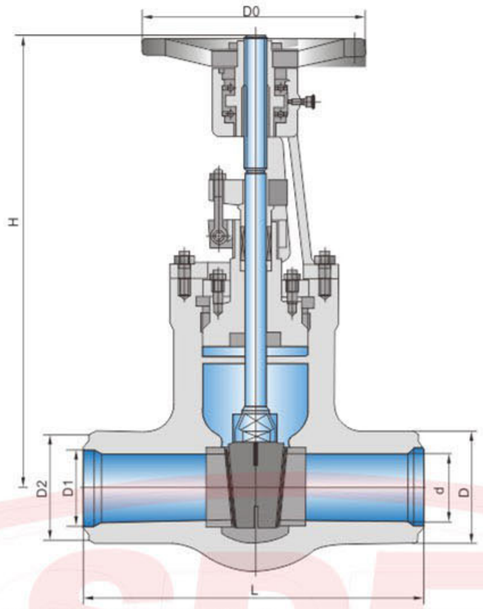

说明 1. 本焊接闸阀采用自密封结构。
2. 阀体长度及焊接口尺寸倒角坡度可根据用户要求生产。

Directions 1. The welding gate valve self-sealing structure.
2. Valve length.Weld size and welding sloe may be specified by customer.

主要性能和使用范围 Chirf Property and Scope of Use

工作温度 Working temperature	-29°C~673°C
阀体材料 Body material	WCB, 20CrMoV, 15Cr1Mo1v, 15CrMo, WC6， WC9, F91, F92, WB36
适用介质 Applicable media	蒸汽、水Steam, water

主要外形尺寸和连接尺寸 Main Dimensions and Connection Dimensions

型号 Model	公称通径(mm)	L	D	D1	D2	H	D0
Z61Y-250 Z61Y-320 Z60Y-250 Z60Y-320 Z60Y-P54140V Z60Y-P54170V Z61Y-P54140V Z61Y-P57170V	50	280	82	50	78	586	300
	65	350	105	68	93	650	320
	80	450	120	83	110	680	400
	100	525	150	108	145	755	450
	125	600	195	129	172	830	500
	150	650	225	166	183	1050	550
	175	750	255	166	183	1050	600
	200	750	285	208	243	1050	650
	225	850	300	208	243	1100	700

注：如有产品参数疑问请致电上海电站阀门有限公司详询，电话：021-59222288
Note: If the product parameters, please call our company detailed inquiry, Tel: 021-59222288

Spur/Conical Gear Driven Welded Gate Valve
正/锥齿轮传动焊接闸阀

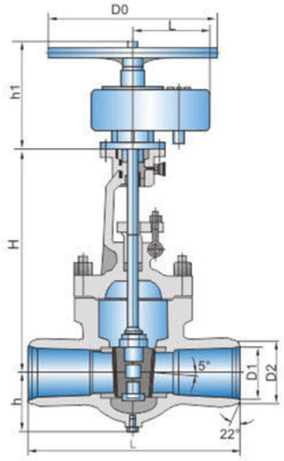

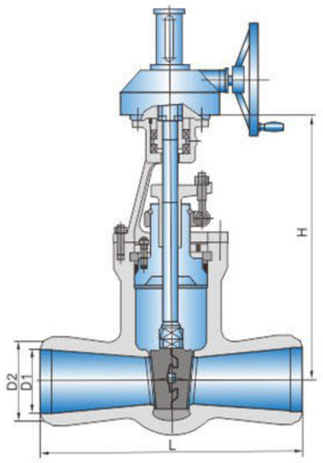

使用范围 Use Range

工作温度 Working temperature	-29°C~673°C
阀体材料 Body material	WCB, 20CrMoV, 15Cr1Mo1v, 15CrMo, WC6, WC9, F91, F92, WB36
适用介质 Applicable media	水、蒸汽 Water, steam

主要外形尺寸和连接尺寸 Main Dimensions and Connection Dimensions

型号 Model	公称通径DN(mm)	L	D1	D2
Z460Y-(200, P54100V) Z560Y-(200, P54100V) Z462Y-(200, P54100V) Z562Y-(200, P54100V) Z461Y-(200, P54100V) Z561Y-(200, P54100V)	150	650	164	200
	175	750	186	223
	200	750	200	262
	225	780/850	233	282
	250	950	275	325
	300	1050	312	380
	350	1150	366	430
	400	1200	410	470
	500	1400	500	570
	600	1550	580	640
Z460Y-(250, 320, P54100V, P55170V) Z560Y-(250, 320, P54100V, P55170V) Z462Y-(250, 320, P54100V, P55170V) Z562Y-(250, 320, P54100V, P55170V) Z461Y-(250, 320, P54100V, P55170V) Z561Y-(250, 320, P54100V, P55170V)	100	550	100	550
	125	600	129	168
	150	650	150	200
	175	750	170	223
	200	750	200	262
	225	780/850	220	282
	250	950	265	325
	300	1050	305	380
	350	1150	366	430
	400	1200	410	470
	500	1400	500	570
	600	1550	580	640

High Temperature High Pressure Welded Electric Gate Valve
高温高压电动焊接闸阀

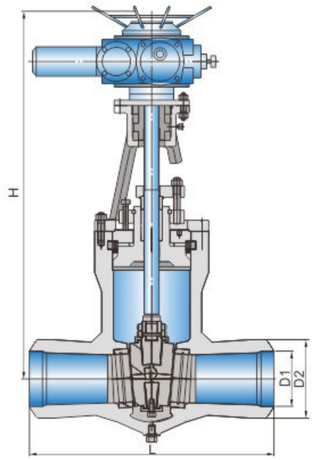

制造验收技术标准

1. 制造与验收技术条件按E101和NB/T47044的规定。
2. 阀门试验按NB/T47044和JB2640-81的规定阀门密封试验和上密封试验压力按NB/T47044的规定。
3. 结构长度按E101的规定或用户提供尺寸。
4. 焊接坡口按电力工业管理标准78DG的规定或按用户提供尺寸。

Manufacture and Acceptance Standard

1. Manufacturing and acceptance technology conform to E101 and NB/T47044.
2. Valve tests conform to NB/T47044 and JB2640-81.and valve sealing tests as well as upper sealing testing pressure conform to NB/T47044.
3. Structure and length conform to E101 or as specified bycustomer.
4. Welding slope conforms to the Power In-dustrial Administration Standards 78DG or as specified by customer.

主要外形尺寸和连接尺寸　Main Dimensions and Connection Dimensions

型号 Model	公称通径DN(mm)	L	D1	D2
	150	650	164	200
	175	750	186	223
	200	750	200	262
Z962H-200	225	780/850	233	282
Z960Y-200	250	950	275	325
Z962Y-P54100V	300	1050	312	380
Z960Y-P54100V	350	1150	366	430
	400	1200	410	470
	500	1400	500	570
	600	1550	580	640
	150	650	150	200
	175	750	170	225
	200	750	200	262
	225	780/850	207	283
Z960Y-320	250	950	250	325
Z960Y-P57170V	300	1050	265	377
	350	1150	366	430
	400	1200	410	470
	500	1400	500	570
	600	1550	580	640
	150	650	150	200
	175	750	176	223
	200	750	200	262
Z962H-250	225	780/850	220	282
Z960Y-250	250	950	265	325
Z962Y-P54140V	300	1050	305	380
Z960Y-P54140V	350	1150	366	430
	400	1200	410	470
	500	1400	500	570
	600	1550	580	640

Electric Forged Welded Gate Valve
电动锻造闸阀

SDFZ960Y, SDFZ962Y

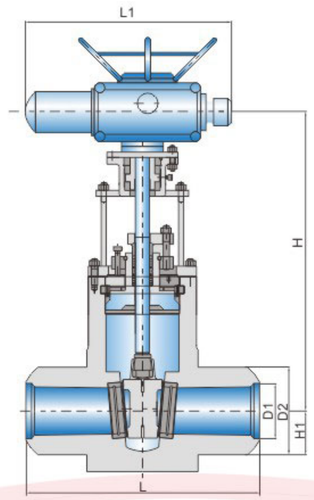

主要零件材料　Material Formain Parts

名称 Name	SDFZ960Y-320 SDFZ962Y-320 SDFZ960Y-420 SDFZ962Y-420	SDFZ960Y-P54140V SDFZ962Y-P57140V SDFZ960Y-P54170V SDFZ962Y-P57170V
阀体 Body	25#锻钢 Forged steel	12Cr1MoV, F91, F92, WB36
阀座 Seat	25#锻钢 Forged steel	12Cr1MoV, F91, F92, WB36
阀瓣 Discs	25#锻钢 Forged steel	12Cr1MoV, F91, F92, WB36
阀盖 Cap	25#锻钢 Forged steel	12Cr1MoV, F91, F92, WB36
阀杆 Stem	2Cr13	25Cr2MoV, F91, F92

主要外形尺寸和连接尺寸　Main Dimensions and Connection Dimensions

DN	L	H	H1	L1	D1	D2	配管尺寸 fitted pipe size	重量(kg) Weight
型号Model:SDFZ960Y-320(锻造Forging)　SDFZ962Y-320(锻造Forging)								
150	450	1270	175	985	164	198	Φ194×15	509.7
175	550	1353	230	946	186	225	Φ219×16	786
225	550	1368	220	946	232	275	Φ273×20	795
型号Model:SDFZ960Y-420(锻造Forging)　SDFZ962Y-420(锻造Forging)								
225	550	1350	230	1030	221	275	Φ273×26	1097
型号Model:SDFZ960Y-P54140V(锻造Forging)　SDFZ962Y-P54140V(锻造Forging)								
150	450	1270	175	946	158	198	Φ194×15	510
225	550	1368	220	946	232	278	Φ273×20	795
型号Model:SDFZ960Y-P57170V(锻造Forging)　SDFZ962Y-P57170V(锻造Forging)								
175	550	1358	230	946	179	222	Φ219×20	786
225	550	1350	230	1030	221	275	Φ273×26	1097

注：如有产品参数疑问请致电上海电站阀门有限公司详询，电话：021-59222288
Note: If the product parameters, please call our company detailed inquiry, Tel: 021-59222288

制造验收技术标准

1. 制造验收技术条件按美标火力发电用阀标准的E101的规定
2. 阀门结构长度按E101的规定。
3. 阀体焊接坡口按ANSI 1316.25的规定或按用户提供的尺寸

Manufacture and Acceptanle Stanelard

1.The manufaceture and acceptance specification shall be based on the japanese stand ard E101 applied for the thermal power plant.
2.The length shall be in line with E101.
3.Valve Body welding grouve shall be in allordance wieh ANSI B16.25 or wieh aser's specificatel.

适用规范 Applicable Specification

壳体材料 Shell material	适用温度 Applicable Temp(°C)	适用介质 Applicable medium
ASTM A216 WCB	≤425	蒸汽、水 steam, water
ASTM A217 WC1	≤480	
ASTM A217 WC6	≤593	
ASTM A217 WC9	≤649	

主要零件材料 Material Formain Parts

零件名称 Part Name	材料牌号 Material grade			
阀体 Body	WCB	WC1	WC6	WC9
闸板 Disc	WCB	WC1	WC6	WC9
阀盖 Bonnet	25 WCB	25 WCB	25 WCB	25 WCB
阀杆 Stem	2Crl3	2Crl3	25Cr2MoV	25Cr2MoV
填料 Packing	增强柔性石墨 Enhanced flexible graphite			
支架 Yoke	WCB	WCB WC1	WCB WC6	WCB WC9
密封环 Sealing ring	S软钢(增强柔性石墨) Soft steel(Enhanced flexible graphite)		S软钢 Soft steel	F软钢 Soft steel
阀杆螺母 Stem nut	ZQA19-4或A439 D2			

注：如有产品参数疑问请致电上海电站阀门有限公司详询，电话：021-59222288
Note: If the product parameters, please call our company detailed inquiry, Tel: 021-59222288

Pound-Grade Gate Valve
磅级闸阀

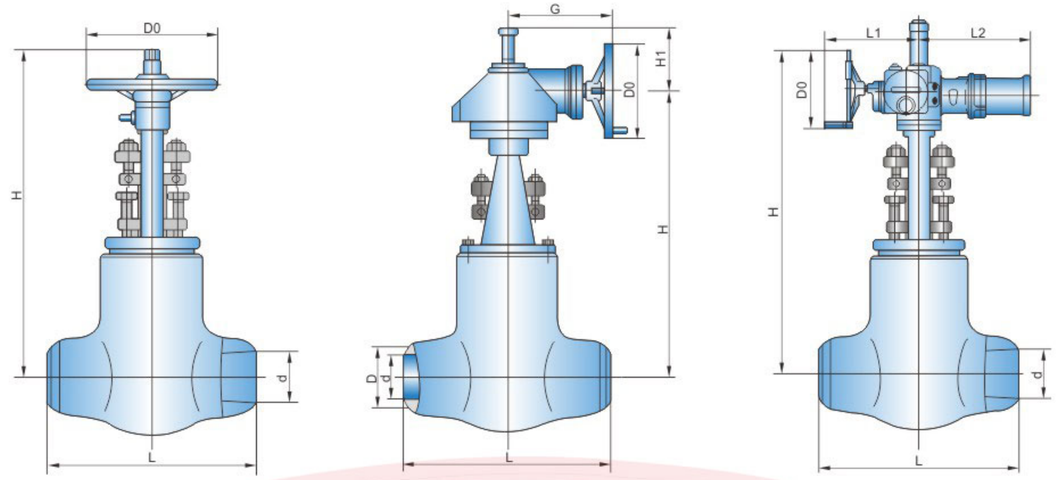

主要外形尺寸和连接尺寸 Main Dimensions and Connection Dimensions

公称通径NPS/in	d	L	H	D0
		Z61Y-CL1500 Z60Y-CL1500		
2 1/2	56	254	671	200
3	64	305	692	200
4	84	406	790	230
5	100	483	875	260
6	126	559	1055	360
8	158	711	1148	410
		Z61Y-CL2000 Z60Y-CL2000		
2 1/2	50	330	640	200
3	60	368	690	230
4	80	457	806	260
5	96	533	984	360
6	118	610	1090	410
		Z61Y-CL2500 Z60Y-CL2500		
2 1/2	46	330	639	200
3	54	368	680	230
4	70	457	805	260
5	86	533	965	360
6	104	610	1070	410
		Z61Y-CL3500 Z60Y-CL3500		
3	44	440	745	260
4	56	540	860	300

Pound-Grade Gate Valve
磅级闸阀

主要外形尺寸和连接尺寸 Main Dimensions and Connection Dimensions

公称通径NPS/in	d	L	H	D0	L1	L2
Z960Y-CL1500 Z961Y-CL1500						
2 1/2	56	254	520	200	140	243
3	64	305	523	200	140	243
4	84	406	599	508	198	281
			599	305	400	555
5	100	483	678	508	198	281
			678	305	400	555
6	126	559	793	305	410	565
			793	305	420	654
8	158	711	813	305	410	565
			813	305	420	654
10	200	864	988	457	440	688
			988	305	420	654
12	250	991	1141	305	420	654
			1156	457	440	688
14	280	1067	1249	610	690	
16	318	1194	1351	610	690	
18	360	1346	1535	610	690	
			1540	610	715	
20	406	1473	1726	610	690	
			1731	610	715	
22	450	1600	1921	610	690	
			1926	610	715	
Z960Y-CL2000 Z961Y-CL2000						
2 1/2	50	33	540	200	140	243
3	60	368	558	508	198	332
4	80	457	654	305	400	555
5	96	533	780	305	400	555
			780	305	410	565
6	118	610	830	305	410	565
8	148	762	960	305	410	565
			960	305	420	654
10	180	914	1020	305	420	654
			1024	457	440	688
12	222	1041	1150	457	440	688
			1166	610	690	
14	254	1118	1230	457	440	688
			1240	610	690	
16	294	1245	1330	610	690	
			1350	610	715	

注：如有产品参数疑问请致电上海电站阀门有限公司详询，电话：021-59222288
Note: If the product parameters, please call our company detailed inquiry, Tel: 021-59222288

主要外形尺寸和连接尺寸 Main Dimensions and Connection Dimensions

公称通径NPS/in	d	L	H	D0	L1	L2
Z960Y-CL2500 Z961Y-CL2500						
2 1/2	46	330	533	508	198	332
			533	200	140	243
3	54	368	549	508	198	332
			549	200	140	243
4	70	457	653	508	198	332
			644	305	410	565
5	86	533	760	305	400	555
			774	305	400	565
6	104	610	850	305	400	555
			861	305	410	565
8	130	762	847	305	410	565
			860	305	420	654
10	162	914	1021	305	420	654
			1050	610	690	
12	210	1041	1125	457	440	688
			1149	610	690	
14	234	1118	1221	610	690	
16	264	1245	1390	610	690	
			1395	610	715	
Z960Y-CL3500 Z961Y-CL3500						
3	44	440	620	508	198	332
			623	305	400	555
4	56	540	721	305	400	555
			730	305	410	565
5	74	616	796	305	410	565
			796	305	420	654
6	88	692	857	305	410	565
			857	305	420	654
8	116	846	1041	305	420	654
			1051	457	440	688
10	142	1000	1197	457	440	688
			1207	610	690	
12	174	1124	1338	610	690	
14	196	1219	1455	610	715	
			1440	610	690	
18	252	1499	1915	610	715	

注：如有产品参数疑问请致电上海电站阀门有限公司详询，电话：021-59222288
Note: If the product parameters, please call our company detailed inquiry, Tel: 021-59222288

Anti-scour Change The Dual Core (Disc/Disc) Main Steam Trap
抗冲刷能换双芯(阀瓣/阀座)主蒸汽疏水阀(专利号: ZL 2016 2 0277802.1)

Anti-scour Change The Dual Core (Disc/Disc) Main Steam Trap
抗冲刷能换双芯(阀瓣/阀座)主蒸汽疏水阀(专利号: ZL 2016 2 0277802.1)

SDFQDSJ61Y-600~4500Lb

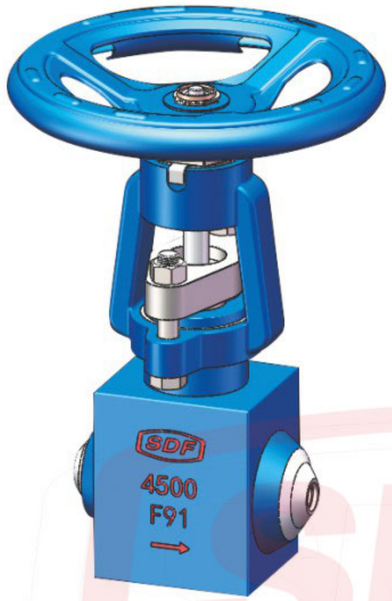

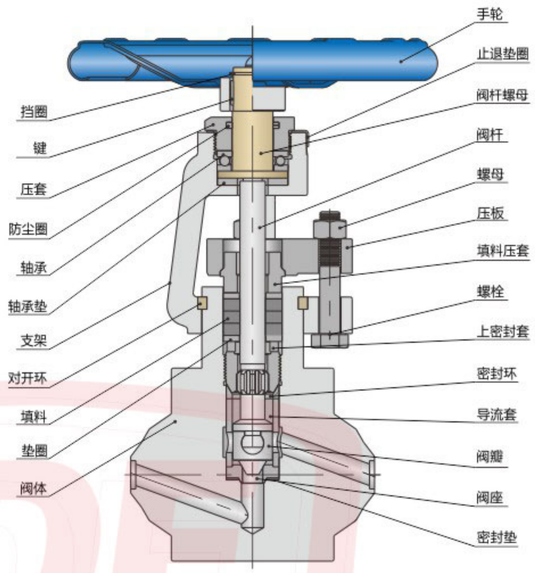

主要用途及特点

一、用途：

用于汽、水管道上作启闭装置。

二、适用场合：

适用于火力发电厂的疏水排污等对阀门密封性能要求较高的场合

三、结构特点：

1. 阀瓣与阀座为独立件安装，锥面密封副堆焊司太立合金，在导流套保护作用下提高抗冲刷性能，延长使用寿命，即使损坏也可在线维修更换阀瓣与阀座。
2. 阀杆上密封结构可实现阀门全开状态的上密封，完成填料的在线检修更换。
3. 阀杆开关无转动只作升降运动，使阀瓣与阀座的锥形密封面紧密压合无转动摩擦，达到最佳的严密封性能，可实现零泄漏。
4. 装在阀杆螺母上的推力轴承使得阀门开启扭矩更轻便。

Chief Usages and Features

I. use:

For steam, water pipe as an opening and closing device.

II. applicable situation:

Suitable for thermal power plant drainage etc. sealing performance of valve occasions with high requirements.

III. structural characteristics:

1. The valve clack and valve seat is separately installed, cone sealing pair, hardfacing stellite, under the protection of flow guide bushing, improves the anti-erosion properties, prolongs the service life, if damaged, can be repaired online and replaced.
2. The sealing structure on the valve spindle can realize the upper sealing of the full open valve and make the maintenance and replacement of packing online.
3. The spindle switch, without rotation, is only applicable for vertical movement, enables the cone sealing face between the valve clack and valve seat to be compressed tightly without pivoting friction, so that it can attain best sound sealing performance and no leakage.
4. The thrust bearing installed on the spindle nut makes the valve opening more convenient.

主要性能和使用范围　Chirf Property and Scope of Use

公称压力(Lb) Nominal pressure	强度试验压力(MPa) Strength test pressure	密封试验(MPa) Seal test pressure	气密封试验压力 Air seal test pressure (MPa)
600	15.0	11.0	0.6
900	24.0	18.0	0.6
1500	37.0	27.0	0.6
2000	48.0	35.0	0.6
2500	63.0	46.0	0.6
3000	75.0	55.0	0.6
3500	90.0	66.0	0.6
4500	105.0	77.0	0.6

主要零件材料　Material Formain Parts

序号 No.	零件名称 Part name	碳钢 Carbon Steel	合金钢 Alloy Steel	合金钢 Alloy Steel
1	阀体 Body	锻钢A105 Forged steel A105	锻钢 12Cr1MoV	F91
2	阀杆 Stem	2Cr13	25Cr2MoV	F91
3	阀瓣 Disc	锻钢A105+硬质合金 Forged steel A105+Carbide	12Cr1MoV+STL	F91+STL
4	导流套 Cage Sets	锻钢A105 Forged steel A105	锻钢 12Cr1MoV	F91
5	阀座 Seat	锻钢A105+硬质合金 Forged steel A105+Carbide	12Cr1MoV+STL	F91+STL

主要结构长度　Main Structure Length

公称通径 Nominal diameter(DN)	10	15	20	25	32	40	50	65	80	100	125	150
结构长度 Structure length(L=mm)	120	150	170	170	180	200	230	250	350	420	460	500

注：如有产品参数疑问请致电上海电站阀门有限公司详询，电话：021-59222288

Note: If the product parameters, please call our company detailed inquiry, Tel: 021-59222288

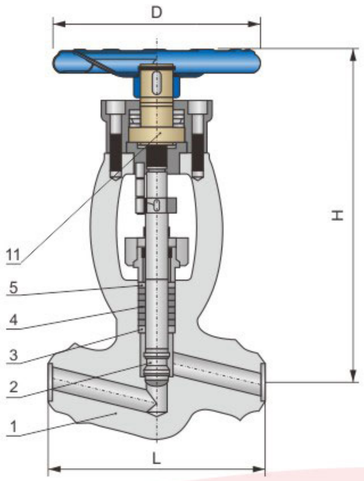

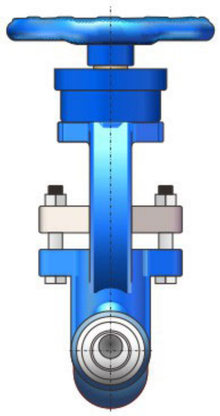

结构特点：

1. 阀体与操作器支架为一体式模锻，整体强度高可保证火电超临界、超超临界工况下使用安全。
2. 流道及内腔是在实心锻造阀体上经数控机床精加工而成，整体结构极其坚实，耐受高温高压。
3. 阀杆和阀芯是一体，整体锻造，强度高、刚性好、承载力强。锥头阀芯还具有节流减压功能。
4. 阀杆只作升降运动无转动摩擦，开关扭矩小，且阀芯与阀座的锥形密封面间紧密压合，达到最佳的密封性能，即零泄漏。
5. 密封面堆焊硬质合金Stellite(司太立)后再硬化并研磨，保证长寿命使用。
6. 阀杆外圆精细抛光，与填料摩擦小，加之阀杆螺母上安装有推力滚针轴承，故开关轻便省力。

Structural Characteristics:

1. The valve body and operator frame is one-piece stamping, its high comprehensive strength can ensure the operation safety of thermal power under supercritical or ultra-supercritical work conditions.
2. The passageway and inner chamber is solidly forged and processed by CNC machine tools, the integral structure is very firm and high-temperature and high-pressure resisting.
3. The valve spindle and spool is one piece, integral forged, high strength, high rigidity and good bearing capacity. The cone spool has the function of throttle down and decompression.
4. The valve spindle is only vertically, without rotation, with small switching torque, the cone sealing face between spool and valve seat is tightly compressed to attain its best sealing performance and no leakage.
5. The hardfacing carbide alloy Stellite on the sealing face is grinded after hardening so as to prolong its service life.
6. The external cycle of the spindle is finely polished, only a little friction with packing, furthermore, the thrust needle bearing installed on the spindle nut is convenient for the easy switching.

主要尺寸表　Main Dimensions

Class (PN)	NPS (DN)	主要尺寸 Main Dimensions (mm)			
		L	H	D	行程
CL1500 (PN260)	3/8" (10)	150	260	180	12
	1/2" (15)	150	260	180	12
	3/4" (20)	180	295	180	18
CL2500 (PN420)	1" (25)	180	295	180	18
	1 1/4" (32)	250	380	280	24
CL4500 (PN760)	1 1/2" (40)	250	380	280	24
	2" (50)	300	480	360	30

(Ultra-)Supercritical Globe Valve (Manual/Electric)— One-piece Stamp Forging
超(超)临界截止阀(手动/电动)——一体模锻，替代进口



注：配用国际著名品牌(SIPOS等)的多回转电动执行器
Note: Multi-rotary electric actuator with international famous brand (Sipos, etc.)



超临界及超超临界参数阀门主要零件材料表
Main Components and Material List of (Ultra-)Supercritical Valves

No.	零件名称 Part name	材料组合 Material Combination		
		≤480°C	≤595°C	≤650°C
1	阀体 Body	F36	F22 Class3	F91 F92
2	阀杆与阀芯 Stem and spool	密封面为硬质合金 Stellite　The sealing face is carbide alloy Stellite		
		F6a Class2, F6a Class3, 25Cr2MoIVA		660, 616HT
		密封面为硬质合金 Stellite　The sealing face is carbide alloy Stellite		
3, 5	填料垫 Packing bush	F304, F316, 06Cr19Ni10, 06Cr17Ni12Mo2		
4	填料 Packing	纯石墨 Graphite		
11	阀杆螺母 Stem nut	铝青铜合金，铝黄铜合金　Aluminum bronze alloy, aluminum brass alloy		

主体材料允许的工作压力(MPa)/温度(°C)对照表
Allowable Operating Pressure of Main Body Materials(MPa)/Temp(°C)

阀体及承压件材料 Materials of valve body and pressure bearing parts	压力 (Class/PN)	工作温度 (°C)													
		-29 ~250	300	350	400	425	450	475	500	538	550	575	600	625	650
F22 Class3	CL1500 (PN260)	25.0	24.9	24.6	24.4	24.4	23.6	21.4	17.8	11.5	9.8	6.6	4.3	2.8	1.7
	CL2500 (PN420)	41.7	41.5	41.0	40.6	40.6	39.3	35.6	29.7	19.2	16.3	10.9	7.1	4.6	2.9
	CL4500 (PN760)	75.0	74.7	73.8	73.1	73.1	70.7	64.1	53.5	34.5	29.3	19.7	12.9	8.3	5.3
F91	CL1500 (PN260)	25.8	25.8	25.7	25.1	24.8	23.5	21.3	17.8	14.5	14.5	14.3	12.2	9.1	6.2
	CL2500 (PN420)	43.0	43.0	42.8	41.8	41.3	39.3	35.6	29.7	24.1	24.1	23.8	20.3	15.2	10.3
	CL4500 (PN760)	77.5	77.5	77.1	75.3	74.4	70.7	64.1	53.5	43.5	43.5	42.8	36.5	27.3	18.6
F92	CL1500 (PN260)	25.8	25.8	25.7	25.1	24.8	23.5	21.3	17.8	14.5	14.5	14.3	13.4	11.4	8.2
	CL2500 (PN420)	43.1	43.1	42.8	41.8	41.3	39.3	35.6	29.7	24.1	24.1	23.8	22.3	19.0	13.8
	CL4500 (PN760)	77.5	77.5	77.1	75.3	74.4	70.7	64.1	53.5	43.5	43.5	42.8	40.2	34.2	24.8

注：F22 Class 3 材料不推荐长时间用于595°C及以上。
Note: F22 Class 3 materials are not suggested to be applied for 595°C or above for a long time.

High Temperature High Pressure Trap
高温高压疏水阀

主要特点及用途

1. 阀门与管路连接采用焊接式结构。
2. 密封面不易磨损，擦伤、密封性能好、寿命长。
3. 结构紧凑、启闭性好、高度小、维修方便。
4. 适用于水、蒸汽、油品管路上，具有耐高温、耐高压的特点。

Chief Features and Usages

1. A welding structure is used to connect the valve and pipelies.
2. The sealing face is op a good sealing property and long duration, uneasy to worn and rubbed.
3. Compact structu e,well to be opened and colsed.lower in height. easy maintenance.
4. Of high-temperature and high-pressure resisting features and suitable for water,steam.Oil goods pipelines.

制造验收技术标准

1. 制造验收技术条件按NB/T47044或E101的规定。
2. 阀门结构长度按ANSI B16.10或E101的规定。
3. 阀体焊接坡口按ANSI B16.25的规定或按用户提供的尺寸。

Manufacture and Acceptance Standard

1. The manufaceture and acceptance specification shall be hased on NB/T47044 or E101
2. The length shall be in line with ANSI B16.10 or with E101.
3. Valve body welding groove shall be in auord ance with ANSI B16/25 or with user's specification.

主要性能和使用范围　Main Performance and Scope Of Use

产品型号 Product number	公称压力 PN(MPa)	试验压力test pressure(MPa)		工作压力 working pressure(MPa)			工作温度(°C) working temp	适用介质 Applicable medium
		壳体强度 Shell strength	密封 seal	P54	P55	P57		
J61(H, Y)-100	10	15	11	/	/	/	≤425	水、蒸汽、油品 Water, steam, oil
J61(H, Y)-200	20	30	22	/	/	/		
J61(H, Y)-250	25	38	28	/	/	/		
J61(H, Y)-320	32	48	36	/	/	/		
J61Y-P54100V	20	30	22	10	/	/		
J61Y-P54140V	25	38	28	14	/	/	≤540	
J61Y-P54170V	/	48	36	17	/	/		
J61Y-P55100V	/	38	28	/	10	/		
J61Y-P55140V	/	48	36	/	14	/	≤550	蒸汽 steam
J61Y-P55170V	/	53	39	/	17	/		
J61Y-P57100V	/	48	36	/	/	10		
J61Y-P57140V	/	55	40	/	/	14	≤570	
J61Y-P57170V	/	60	44	/	/	17		

主要零件材料　Main Parts Materials

零件名称 Accessory name	阀体 Body	阀盖 Bonnet	阀杆 Stem	阀瓣 Disc	密封面 Sealing face	填料 Packing	阀杆螺母 Valve stem nut	手轮 Hand wheel	紧固件 Fastener
J61H J961H	25 WCB	25 WCB	铬不锈钢氮化 Cr.stainless steel nitration	25	硬质合金 Carbide alloy	柔性石墨 Flexible graphite	铝青铜 Aluminum bronze	可锻铸铁 forgrable cast-iron	优质碳钢 铬钼钢 high quality carbon steel Cr.mo steel
J61Y J961Y	25 WCB	25 WCB	铬不锈钢氮化 Cr.stainless steel nitration	25	硬质合金 Carbide alloy				
J61Y-P54 J961Y-P54	12Cr1MoV WC6	12CrlMoV WC6	20Cr1Mo1VA 38Cr1MoAlA 25Cr2MoV	12Cr1MoV	硬质合金 Carbide alloy				
J61Y-P55 J961Y-P55	12Cr1MoV WC6	12CrlMoV WC6	20Cr1Mo1VA 38Cr1MoAlA 25Cr2MoV	12Cr1MoV	硬质合金 Carbide alloy				
J61Y-P57 J961Y-P57	12Cr1MoV WC9	12CrlMoV WC9	20Cr1Mo1VA 38Cr1MoAlA 25Cr2MoV	12Cr1MoV	硬质合金 Carbide alloy				

注：如有产品参数疑问请致电上海电站阀门有限公司详询，电话：021-59222288
Note: If the product parameters, please call our company detailed inquiry, Tel: 021-59222288

High Temperature High Pressure Trap
高温高压疏水阀

J61Y-100, 200, 250,320　J61Y-P54/100V, P54/140V, P54/170V

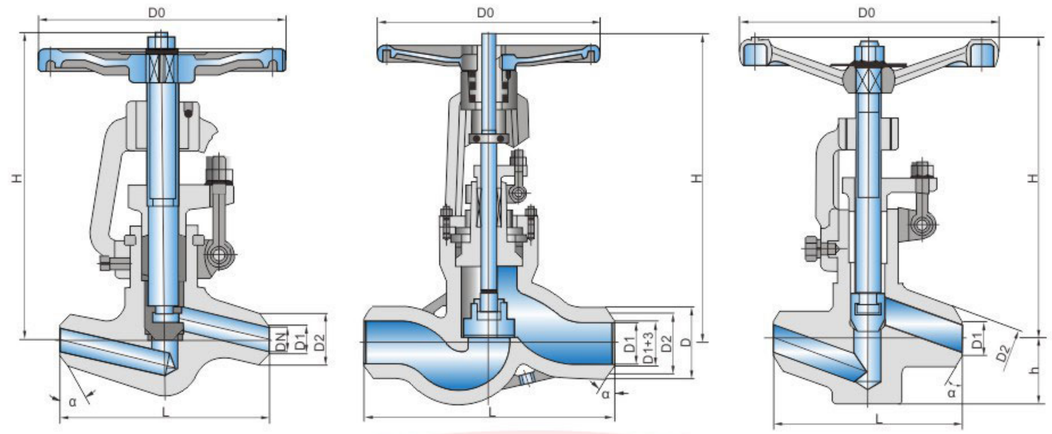

主要外形尺寸和连接尺寸　Main Dimensions and Connection Dimensions

公称通径DN	L	D1	D2	D3	α	H	D0
		J61Y-100, 200, 250,320　J61Y-P54/100V, P54/140V, P54/170V					
10	120	12	25	/	37.5°	185	140
15	150	17	36	/	37.5°	247	200
20	170	22	42	/	37.5°	248	200
25	170	26	42	/	37.5°	248	240
32	180	31	44	/	37.5°	248.5	280
40	230	38	60	/	37.5°	440	280
50	320	50	82	/	32°	450	320
65	330	69	100	110	32°	669	400
80	470	84	108	130	32°	669	450
100	560	107	144	165	32°	755	500
		J61Y-P55/100V, P55/140V, P55/170V　J61Y-P57/100V, P57/140V, P57/170V					
10	120	12	28	/	37.5°	189	140
15	150	17	40	/	37.5°	250	200
20	170	22	46	/	37.5°	252	200
25	170	26	46	/	37.5°	254	240
32	180	31	49	/	37.5°	254	280
40	230	38	60	/	37.5°	440	280
50	320	50	90	/	32°	455	320
65	330	69	104	110	32°	630	400
80	470	84	110	140	32°	672	450
100	560	107	148	170	32°	761	500

High Temperature High Pressure Trap
高温高压电动疏水阀

J961Y-100, 200, 250,320 J961Y-P54/100V, P54/140V, P54/170V



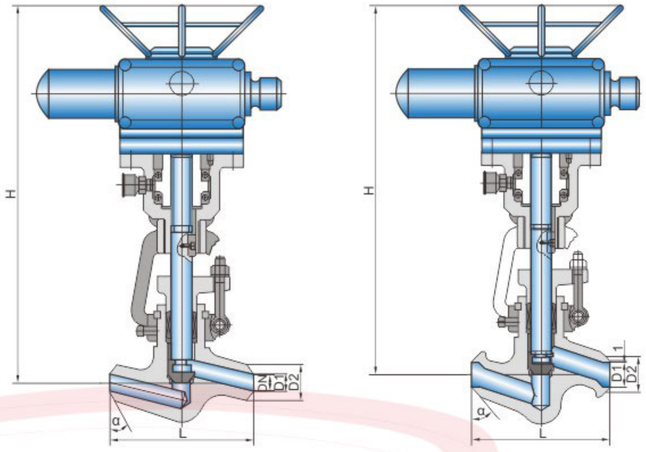

主要性能和使用范围　Main Performance and Scope of Use

产品型号 Product type	公称压力 PN(MPa)	试验压力Test Pressure(MPa)		工作压力 Working Pressure(MPa)			工作温度(°C) working temp	适用介质 Applicable medium
		壳体强度 Shell strength	密封 seal	P54	P55	P57		
J961(H, Y)-100	10	15	11	/	/	/	≤450	水、蒸汽、油品 Water, steam, oil
J961(H, Y)-200	20	30	22	/	/	/		
J961(H, Y)-250	25	38	28	/	/	/		
J961(H, Y)-320	32	48	36	/	/	/		
J961Y-P54100V	20	30	22	10	/	/	≤540	蒸汽 steam
J961Y-P54140V	25	38	28	14	/	/		
J961Y-P54170V	32	48	36	17	/	/		
J961Y-P55100V	25	38	28	/	10	/	≤550	
J961Y-P55140V	32	48	36	/	14	/		
J961Y-P55170V	/	53	39	/	17	/		
J961Y-P57100V	/	48	36	/	/	10	≤570	
J961Y-P57140V	/	55	40	/	/	14		
J961Y-P57170V	/	60	44	/	/	17		

注：如有产品参数疑问请致电上海电站阀门有限公司详询，电话：021-59222288
Note: If the product parameters, please call our company detailed inquiry, Tel: 021-59222288

High Temperature High Pressure Electric Trap
高温高压电动疏水阀



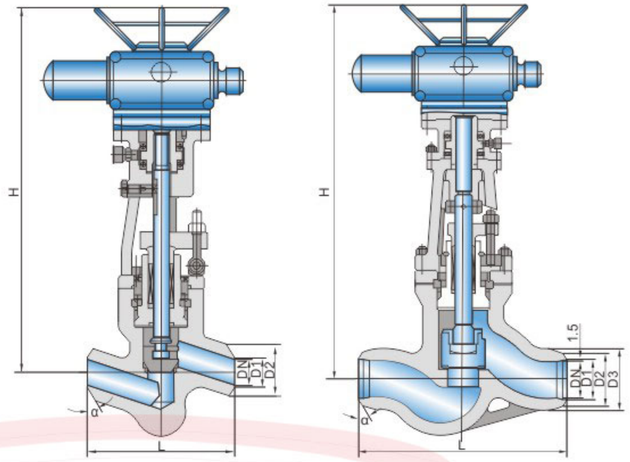

主要外形尺寸和连接尺寸　Main Dimensions and Connection Dimensions

公称通径DN	L	D1	D2	D3	α	H
J961(H, Y)-100, 200, 250, 320 J961Y-P54/100V, P54/140V, P54/170V						
15	150	17	36	/	37.5°	518
20	170	22	42	/	37.5°	518
25	170	26	42	/	37.5°	518
32	180	31	44	/	37.5°	560
40	230	38	60	/	37.5°	545
50	320	50	82	/	32°	748
65	330	69	100	110	32°	829
80	470	84	108	130	32°	898
100	560	107	144	165	32°	913
J961Y-P55/100V, P55/140V, P55/170V J961Y-P57/100V, P57/140V, P57/170V						
15	150	17	40	/	37.5°	518
20	170	22	46	/	37.5°	518
25	170	26	46	/	37.5°	518
32	180	31	49	/	37.5°	560
40	230	38	60	/	37.5°	545
50	320	50	90	/	32°	748
65	330	69	104	115	32°	829
80	470	84	110	140	32°	898
100	560	107	148	170	32°	913

制造验收技术标准

1. 制造验收技术条件按I日本火力发电阀门标准E101的规定；
2. 阀门结构长度按E101的规定；
3. 阀体焊接坡口按ANSI B16.25的规定成按用户提供的尺寸；

Manufacture and Acceptance Standard

1. The manufaceture and acceptance specifi cation shall be based onther japanese seandard E101applied for the thermal power plant.
2. The length shall be in line with E101.
3. Valve body welding groove shall be in auord ance with ANSI B16/25 or with user's specification.

适用规范 Applicable Specification

壳体材料 Shell matrial	适用温度(°C) Applicable temperature	适用介质 Applicable medium
ASTM A216 WCB	≤425	蒸汽、水 steam, water
ASTM A217 WC1	≤480	
ASTM A217 WC6	≤593	
ASTM A217 WC9	≤649	

主要零件材料 Material Formain Parts

零件名称 Part name	材料牌号 Material designation			
阀体 Body	WCB	WC1	WC6	WC9
阀瓣 Disc	25	12Cr1MoV	12Cr1MoV	12Cr1MoV
阀盖 Bonnet	25	12Cr1MoV	12Cr1MoV	12Cr1MoV
阀座 Seat	25	12Cr1MoV	12Cr1MoV	12Cr1MoV
阀杆 Stem	2Cr13	25Cr2MoV	25Cr2MoV	25Cr2MoV
支架 Yoke	WCB A105	WCB	WCB	WCB
		25	25	25
密封环 Sealing ring				柔性石墨+304 Fexible graphite+304
填料 Packing	增强柔性石墨 Fexible graphite			
阀杆螺母 Valve stem nut	ZQA19-4			
蝶型弹簧 Butterfly spring	60Si2Mn			

注：蝶型弹簧是Y型截止阀零件
Note: butsarfly spring is parts for Y type stop valve

Pound-Grade Globe Valve
磅级截止阀

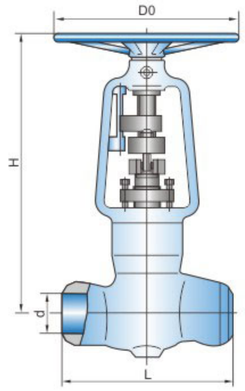

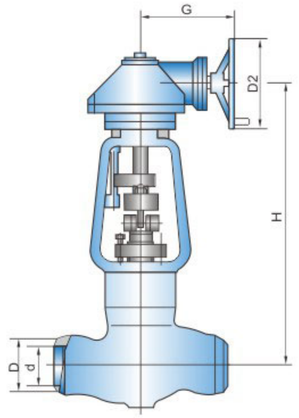

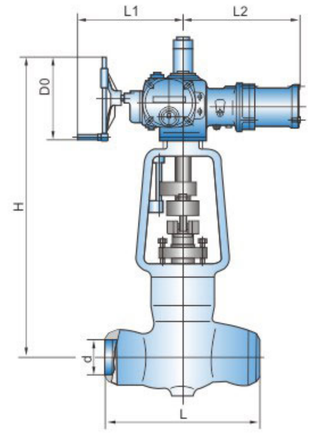

主要外形尺寸和连接尺寸 Main Dimensions and Connection Dimensions

J61Y-1500LB

公称通径 DN(in)	d	L	H	D0
3	65	390	820	510
4	80	480	910	560
5	103	580	985	610
6	124	630	1105	800

J61Y-2000LB J61Y-2500LB

公称通径 DN(in)	d		L	H		D0
2 1/2	52△	47*	420	815△	840*	510
3	62△	55*	470	895△	940*	560
4	80△	73*	570	975△	1045*	610
5	98△	88*	660	1045△	1275*	700
6	120△	104*	760	1246△	1400*	800

注Note: △-j61y-2000lb *-j61y-2500lb

J61Y-3500LB

公称通径 DN(in)	d	L	H	D0
2 1/2	38	480	890	460
4	48	640	1030	560
5	55	800	1155	610

注：如有产品参数疑问请致电上海电站阀门有限公司详询，电话：021-59222288
Note: If the product parameters, please call our company detailed inquiry, Tel: 021-59222288

主要外形尺寸和连接尺寸　Main Dimensions and Connection Dimensions

公称通径DN(in)	d	L	H	D0	LI	L2	电动装置 electric driving
J961Y-CL1500							
3	64	390	1030	305	400	555	SMC-00
			1077	305	410	565	SMC-0
4	84	480	1030	305	410	565	SMC-0
			1070	305	420	645	SMC-1
5	100	580	1125	305	420	654	SMC-1
			1135	457	440	688	SMC-2
6	125	630	1681	305	420	654	SMC-1
8	158	770	1860	305	420	654	SMC-1
J961Y-CL2000							
2 1/2	50	420	975	305	410	565	SMC-0
			1015	305	420	654	SMC-1
3	60	470	1060	305	410	565	SMC-0
			1095	305	420	654	SMC-1
4	80	570	1220	305	420	654	SMC-1
			1235	457	440	688	SMC-2
5	96	660	1425	457	440	688	SMC-2
			1500	610	690		SMC-3
6	118	760	1480	457	440	688	SMC-2
			1560	610	690		SMC-3
J961Y-CL2500							
2 1/2	46	420	975	305	410	565	SMC-0
			1015	305	420	654	SMC-1
3	54	470	1065	305	410	565	SMC-0
			1095	305	420	654	SMC-1
4	70	570	1220	305	420	654	SMC-1
			1235	457	440	688	SMC-2
5	88	660	1425	457	440	688	SMC-2
			1500	610	690		SMC-3
6	104	760	1480	457	440	688	SMC-2
			1685	610	690		SMC-3
J961Y-CL3500							
2 1/2	38	480	945	305	400	555	SMC-00
			1025	305	410	565	SMC-0
3	48	640	1150	305	410	565	SMC-0
			1185	305	420	654	SMC-1
4	60	762	1366	305	710	565	SMC-0
			1300	457	440	688	SMC-2
5	74	864	1530	457	440	688	SMC-2
6	88	965	1725	610	690		SMC-3

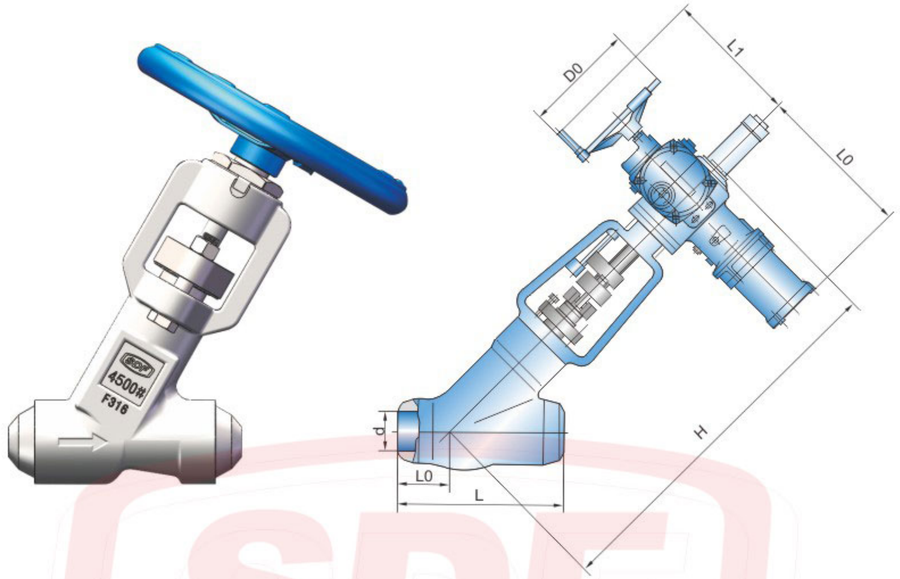

主要外形尺寸和连接尺寸　Main Dimensions and Connection Dimensions

J65Y-CL1500

公称通径DN(in)	d	L	L0	H	D0
2 1/2	56	330	130	670	360
3	64	368	140	750	460
4	84	457	170	830	510
5	100	533	185	910	560
6	126	610	190	1100	610

J65Y-CL2500

公称通径DN(in)	d	L	L0	H	D0
2	38	310	120	550	300
2 1/2	46	340	130	670	360
3	54	390	147	750	460
4	70	480	170	830	720

注：如有产品参数疑问请致电上海电站阀门有限公司详询，电话：021-59222288
Note: If the product parameters, please call our company detailed inquiry, Tel: 021-59222288

主要外形尺寸和连接尺寸 Main Dimensions and Connection Dimensions

J965Y-CL1500

公称通径DN(in)	d	L	L0	H	D0	L1	L2	电动装置 Electric Driving
3	64	368	140	990	305	410	565	SMC-0
4	84	457	170	990	305	420	654	SMC-1
5	100	533	185	1115	305	420	654	SMC-1
6	126	610	190	1763	457	440	688	SMC-2
8	158	762	262	2026	457	440	688	SMC-2

J965Y-CL2000

公称通径DN(in)	d	L	L0	H	D0	L1	L2	电动装置 Electric Driving
4	80	457	170	990	305	420	654	SMC-1
5	96	533	185	1115	305	420	654	SMC-1
6	118	610	190	1423	457	440	688	SMC-2
8	148	762	262	1615	457	440	688	SMC-2
10	180	914	300	2240	610	715		SMC-4
12	222	1041	360	2490	610	715		SMC-4

J965Y-CL2500

公称通径DN(in)	d	L	L0	H	D0	L1	L2	电动装置 Electric Driving
2	38	310	120	810	305	400	555	SMC-00
2 1/2	46	340	130	895	305	400	555	SMC-00
3	54	390	140	985	305	410	565	SMC-0
4	70	480	170	990	305	420	654	SMC-1
5	86	580	185	1115	305	420	654	SMC-1
6	104	630	200	1280	457	440	688	SMC-2
8	130	770	260	1615	457	440	688	SMC-2
10	162	930	300	1930	610	690		SMC-3
12	210	1060	360	2240	610	715		SMC-4
14	234	1160	395	2420	610	715		SMC-4

J965Y-CL3500

公称通径DN(in)	d	L	L0	H	D0	L1	L2	电动装置 Electric Driving
3	48	470	150	1005	305	410	565	SMC-0
4	60	550	115	1133	305	410	565	SMC-0
5	74	660	200	1280	305	420	654	SMC-1
6	88	790	230	1320	305	420	654	SMC-1

注：如有产品参数疑问请致电上海电站阀门有限公司详询，电话：021-59222288
Note: If the product parameters, please call our company detailed inquiry, Tel: 021-59222288



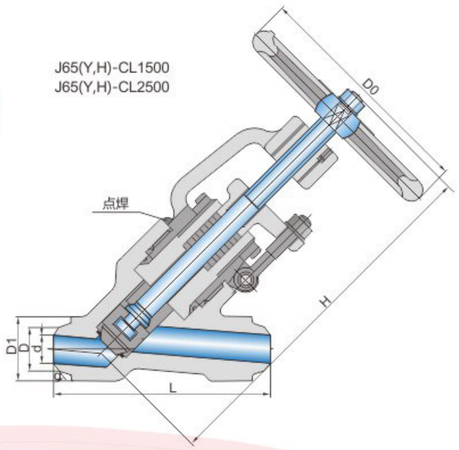

性能特点

1. 阀体阀盖为整体锻制而成，强度高，造型美观，材质可靠。
2. 中腔采用自紧密封结构，压力越高，密封性越好。独特的不锈钢自密封圈，拆装方便，密封可靠。
3. 阀杆表面经超强致密耐磨处理，耐磨耐蚀， 启闭磨擦小，确保产品无外漏之虞。

Features of Performance

1. Both body and bonnet are integrally forged, high strength, nice model, reliable material.
2. The middle cavity is of a self tightly sealed structure, the higher the pressure, the better the tightness. Unique stainless steel seal-seal ring, easily disassembled and assembled and reliably sealed
3. The stem surface is processed with the way of extra-strength caused sealing and wear-resisting, wearable, small open-close friction, making it surely without leak.

主要外形尺寸和连接尺寸 Main Dimensions and Connection Dimensions

J65(Y, H)-CL1500

规格 Specification \ 尺寸 Size	D	D1	d	α	H	L	D0
15	24	56	15	37.5°	315	190	200
20	32	56	19	37.5°	315	190	200
25	38	56	24	37.5°	315	190	200
32	48	82	30	37.5°	435	220	240
40	52	82	34	37.5°	435	220	280
50	66	90	42	37.5°	480	250	320

J65(Y, H)-CL2500

规格 Specification \ 尺寸 Size	D	D1	d	α	H	L	D0
15	24	56	15	37.5°	315	190	200
20	32	56	19	37.5°	315	190	200
25	38	56	20	37.5°	315	190	200
32	48	82	29	37.5°	435	220	240
40	52	82	30	37.5°	435	220	280
50	66	90	39	37.5°	480	250	320

Socket-welded, Direct-flow, Self-sealed Globe Valve (Model BW)
直流、对焊、自密封式截止阀(BW型)



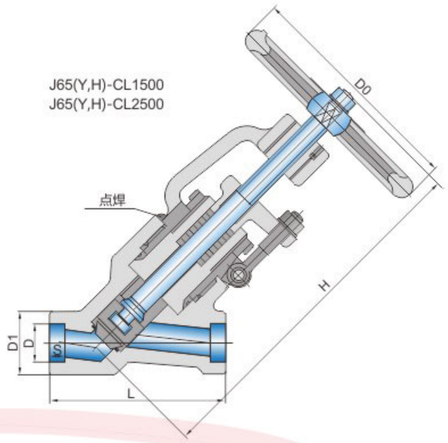

性能特点

1. 阀体阀盖为整体锻制而成，强度高，造型美观，材质可靠。
2. 中腔采用自紧密封结构，压力越高，密封性越好。独特的不锈钢自密封圈，拆装方便，密封可靠。
3. 阀杆表面经超强致密耐磨处理，耐磨耐蚀，启闭磨擦小，确保产品无外漏之虞。

Features of Performance

1. Both body and bonnet are integrally forged, high strength, nice model, reliable material.
2. The mid the higher the pressure, the better the tightness. Unique stainless steel seal-seal ring, easily disassembled and assembled and reliably sealed
3. The stem surface is processed with the way of extra-strength caused sealing and wear-resisting, wearable, small open-close friction, making it surely without leak.

主要外形尺寸和连接尺寸 Main Dimensions and Connection Dimensions

J65(Y, H)-CL1500

尺寸 Size / 规格 specification	D	D1	H	L	S	D0
15	22	56	315	155	13	200
20	27	56	315	155	13	200
25	34	56	315	155	13	200
32	43	82	435	210	13	240
40	49	82	435	210	13	280
50	61	90	480	250	16	320

J65(Y, H)-CL2500

尺寸 Size / 规格 specification	D	D1	H	L	S	D0
15	22	56	315	155	13	200
20	27	56	315	155	13	200
25	34	56	315	155	13	240
32	43	82	435	210	13	240
40	49	82	435	210	13	280
50	61	90	480	250	16	320

Lifting Check Valve
升降式止回阀

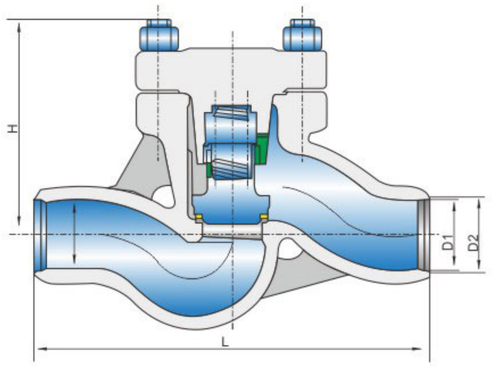

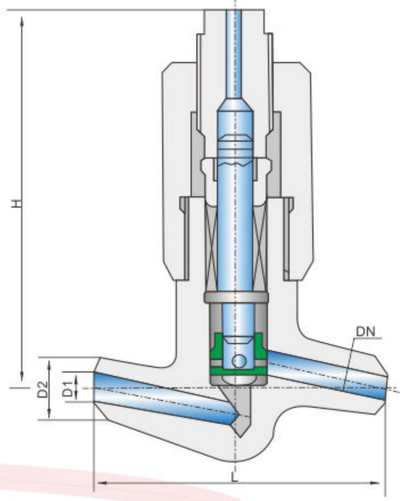

使用范围 Using Range

工作温度(°C) Working temp	H61H-P55170:550°C; 其余型 other type: < 450°C
阀体材料 Body material	H61H-P55170:12Cr1MoV; 其余型 other type :碳钢 Carbon steel
适用介质 Applicable medium	水、蒸汽 water, steam

主要外形尺寸和连接尺寸 Main Dimensions and Connection Dimensions

H61(Y, H)-250/320/P55140V/P55170V

DN(mm)	D1	D2	L	H
10	12	23	120	105
20	27	45	135 / 170	125
25	28	46	135 / 200 / 170	124
32	30	50	180 / 200	250
40	38	60	230	300
50	61	80	350 / 320	350
65	69	90	260 / 370	380
80	84	118	340 / 400 / 430	330
100	113	138	410 / 455 / 560	390
150	150	190	750	428
175	186	239	900	518
200	201	260	950	

注：如有产品参数疑问请致电上海电站阀门有限公司详询，电话：021-59222288
Note: If the product parameters, please call our company detailed inquiry, Tel: 021-59222288

Pound-Grade Electric Station Swing Type Check Valve
磅级电站旋启式止回阀

主要零件材料 Major Part Material

零件名称 Part name	材料牌号 Material mark			
阀体 Body	WCB	WC1	WC6	WC9
阀座 Seat	25	15CrMoA	12Cr1MoVA	
阀瓣 disc	WCB	WC1	WC6	WC9
摇杆 rocker	WCB	WC1	WC6	WC9
阀盖 Bonnet	25	15CrMoA	12Cr1MoVA	
密封环 Sealing ring	1Cr17Ni2		20CrMo1VA	
密封环 Sealing ring	S软钢(增强柔性石墨) soft steel (flexible graphite)		S软钢 soft steel	F软钢 soft steel

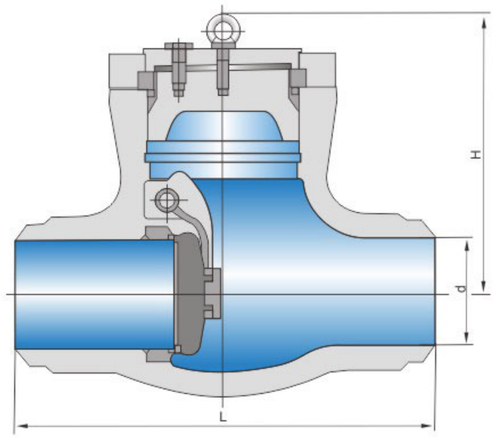

主要外形尺寸和连接尺寸 Main Dimensions and Connection Dimensions

公称通径DN(mm)	d	L	H
	H64Y-CL1500 H64Y-250/P55140V		
2 1/2	56	254	282
3	64	325	300
4	84	406	350
5	100	483	425
6	126	559	400
8	158	711	490
10	200	864	540
12	250	991	650
14	280	1067	710
	H64Y-CL2000 H64Y-320/P55170V		
2 1/2	50	330	240
3	60	368	305
4	80	457	315
5	96	533	409
6	118	610	465
8	147	762	528
10	180	914	613
12	222	1041	680
14	254	1118	745
	H64Y-CL2500 H64Y-420/P55250V		
3	54	368	297
4	70	457	385
5	86	533	410
6	104	610	455
8	130	762	557
10	162	914	615
12	210	1041	715
14	234	1118	790
16	264	1245	815
18	304	1397	815

Emptying Check Valve
空排止回阀



工作原理

175H48Y(H)-200空排止回阀为我厂开发的最新产品，主要用于火电厂给水泵出口处配合水泵最小流量再循环阀工作，维持系统的安全运行。动作原理如下：

打开出口阀，给水泵启动，给水达到一定的压力后，阀芯自动升起，推离阀座，给水即流出。同时阀芯连杆拔动排空口阀片封闭排空口。当给水泵流量减小时，阀芯下落，推动连杆拔开排空阀片，开启再循环门维持水泵最小流量。当停泵时，阀芯自动下落关闭通道，从而防止高压水锤对给水系统的破坏。

Working Principle

175H48Y(H)-200 emptying check valve is the latest developed product and mainly used at the water pump outlet in a thermal power plant to work with the minimum flow recycling valve of the pump for keeping the system's safe movement.Here comes the movement principle:

Open the outlet vlave to start the water supply pump and, when the supplied water gets to a certain pressure,the valve core will be automatically raised to push the seat ring away,the supplied water then flows out and,meanwhile,the valve core's linkage turns the disc at the emptying port to close the port. when the flow of the water supply pump becomes smaller,the disc to open the recycling door to keep a minimum flow for the pump.When the pump stops,the valve core will automatically fall to close the channel so as to prevent the water supply system from damage due to the high pressure water hammer.



主要性能规范 Main Performance Specifications

工作温度 Operating temp	-29°C~673°C
工作压力 Working pressure	PN64~320
适用介质 Applicable media	水，蒸汽等 water, steam.etc

主要零件材料 Material Formain Parts

零件名称 Part mane	材料material
阀体、定位轮、连接法兰、排气法兰、法兰盖 Body, positioning wheel, connecting flange, exhaust flange, flange cover	碳素铸钢、合金钢 Carbon steel, alloy steel
导向轴、拔叉、轴套、滑块、排放套、排气盘 Guide shaft, fork, shaft sleeve, slide block, exhaust sleeve, exhaust disc	不锈钢、合金钢 Stainless steel, alloy steel
螺栓、螺柱 Bolt and stud	铬钼钢 Cr.Mo. steel
衬套 bushing	铸铝青铜 Cast aluminum bronze
阀瓣、阀瓣体、阀瓣轴、连接叉、螺母 Disc, disc body, disc shaft, joint fork, nut	优质碳素钢、合金钢 High quality carbon steel, alloy steel

注：如有产品参数疑问请致电上海电站阀门有限公司详询，电话：021-59222288

Note: If the product parameters, please call our company detailed inquiry, Tel: 021-59222288

Block Valve
堵阀

结构简述

1.采用压力自紧式密封结构，两端支管为焊接连接。
2.采平面O型圈密封，阀座采用不锈钢堆焊而成。
3.水压试验时装入堵板，水压试验后取出堵板，可多次进行水压试验。

Structure Is Briefly

1. Pressure self-tight seal structure, both ends of the pipe for the welding connection.
2. mining plane o ring seal, the valve seat made of stainless steel surfacing.
3. Water pressure test into the blocking board, remove the blocking board after the hydrostatic test, hydrostatic test can be repeated.

型号编制 Model Establishment

SD	1	2	3	4	5	6
阀门类型 Valve type	1.传动方式 Transmission Mode	2.连接方式 Connection method	3-结构型式 Structure type	4.密封面材料 Sealing surface material	5.压力级数值 Pressure level value	6.阀体材料 Body material
SD-水压试验堵阀 SD-hydraulic test plug valve	省略-手动 3-齿轮传动 Omitted - manual 3-gear drive	6-对焊 6-Butt welding	1-堵板式 4-下翻板式 1- Block board type 4- Under flap type	X-橡胶 Y-硬质合金 X-Rubber Y-Cemented carbide	磅级或公制 Pound or metric	C-WCB(省略) C9-WC9 C-WCB (omitted) C9-WC9

例如：28"SY364Y900LBC9, 表示900LB 28"焊接端 蜗轮传动水压试验阀 下翻板式 密封面材料为硬质合金 阀体材料为WC9
For example: 28 "SY364Y900LBC9, said 900LB 28" Welded end worm drive hydraulic test valve flap type sealing surface material is carbide body material is WC9



主要性能规范 Main Performance Specifications

产品型号 Product number	公称压力 Nominal pressure	壳体试验压力(MPa) Shell test pressure	密封试验压力(MPa) Seal test pressure
SD61X-CL600 SD364Y-CL600	600LB	15.0	11.0
SD61X-900LBC9 SD364Y-CL900C9	900LB	22.5	16.5
SD61X-CL3000C9	3000LB	47.5	34.7
SD61Y-64	6.4	9.6	7.1
SD61Y-P_{54}50V	P_{54}50V	15.0	6.3
SD61Y-P_{54}64V	P_{54}64V	15	8.0
SD61Y-P_{35}64	P_{35}64	15	8
SD61Y-100	10.0	15.0	6.5
SD61YP_{55}50V	P_{55}50V	17.25	6.5

主要外形尺寸和连接尺寸 Main Dimensions and Connection Dimensions

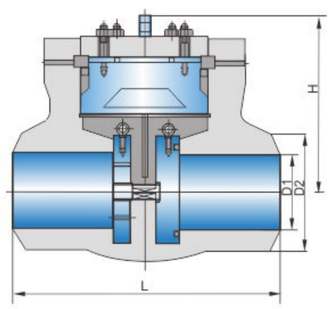

型号规格 Model specifications	L	d	D	H
22"SD61X-CL600	1295	500	586	655
28"SD61X-CL900C9	1753	608	762	1012
22"SD61X-CL3000C9	1499	330	580	970
22"SD364Y-CL600	1295	500	584	700
34"SD364Y-CL600	1753	778	882	1044
22"SD364Y-CL900	1455	476	570	910
28"SD364Y-CL900	1753	608	762	1007
350SD61Y-64	900	325	410	555
400SD61H-40	950	385	465	570
450SD61Y-P_{54}50V	1100	450	560	695
500SD61Y-P_{54}64V	1100	460	570	705
530SD61Y-PJS64	1100	515	570	734
950SD61YPSS50V	1850	930	1120	1340
1000SD61Y100	1850	995	1135	1310

安装说明：1.阀门安装必须按阀体上流向箭头方向安装，水压试验后取出的堵板、O型圈妥善保存。2.试验水温为20~70°C
Installation instructions: 1. The valve must be installed according to the direction of the arrow on the valve body installation, hydraulic test block removed after the O-ring properly preserved. 2. The test water temperature is 20~70°C

Special Power Station-oblique Check Valve
电站特殊专用阀门之一直流式止回阀

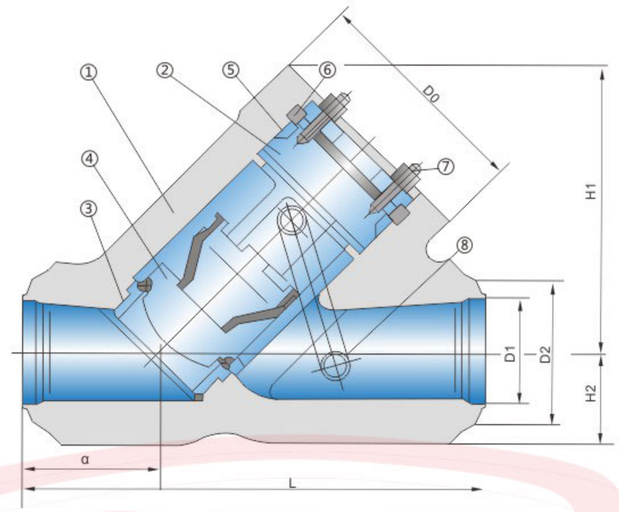

用途

安装在水平管道，作为自动防止介质逆流的安全装置。

结构简述

阀瓣作升降运动，连通管使阀瓣的上腔与阀门出口连通，在阀瓣开起与回落时，减少了冲击和振动，并使阀瓣达到全行程。
2.阀体为“Y”型,阻力小，导向筋上堆焊铁基硬质合金，阀体上腔导向套采用不锈钢材料制成，保证阀瓣动作灵活。
3.压力自紧式密封机构，靠介质本身压力密封，压力越高，密封性越好。
4.阀瓣与阀座密封面采用钴基硬质合金等离子喷焊而成，硬度高、抗冲蚀、抗擦伤、经久耐用。

Use

Installed in a horizontal pipe, as a safety device to prevent the media from countercurrent.

Structure Description

The valve flap moves up and down, and the connecting pipe communicates the upper chamber of the valve with the valve outlet, reduces the shock and vibration when the valve disc rises and falls, and reaches the whole stroke of the valve.
2. The valve body is "Y" type, the resistance is small, the guide ribs on the surfacing iron-based carbide, the valve body guide sleeve made of stainless steel, to ensure that the valve flap flexible.
3. Pressure from the tight seal mechanism, by the pressure of the media itself sealed, the higher the pressure, the better the sealing.
4. Valve and valve seat sealing surface using cobalt-based carbide plasma spray welding, high hardness, erosion resistance, anti-abrasion, durable.

主要零件材料 Material Formain Parts

件号 Part Number	1	2	3	4	5	6	7	8
零件名称 Part Name	阀体 Body	阀盖 Bonnet	阀座 Seat	阀瓣 Disc	密封圈 Sealing ring	四合环 Snap ring	螺栓 bolt	连接管 Connecting pipe
材料 Material	碳钢 Carbon steel	碳钢 Carbon steel	碳钢 Carbon steel	碳钢 Carbon steel	石棉盘根 Asbestos packing	渗氮钢 Nitriding steel	合金钢 Alloy steel	碳钢 Carbon steel

主要外形尺寸和连接尺寸 Main Dimensions and Connection Dimensions

DN(mm)	L	α	H1	H2	D0	D1	D2	h	配管尺寸 Piping size
300	1370	400	238	854	686	306	406	200	Φ406×50
350	1372	405	258	870	670	326	426	220	Φ426×50

注：如有产品参数疑问请致电上海电站阀门有限公司详询，电话：021-59222288
Note: If the product parameters, please call our company detailed inquiry, Tel: 021-59222288

Special Power Station-check Valve
电站特殊专用阀门之二止回阀

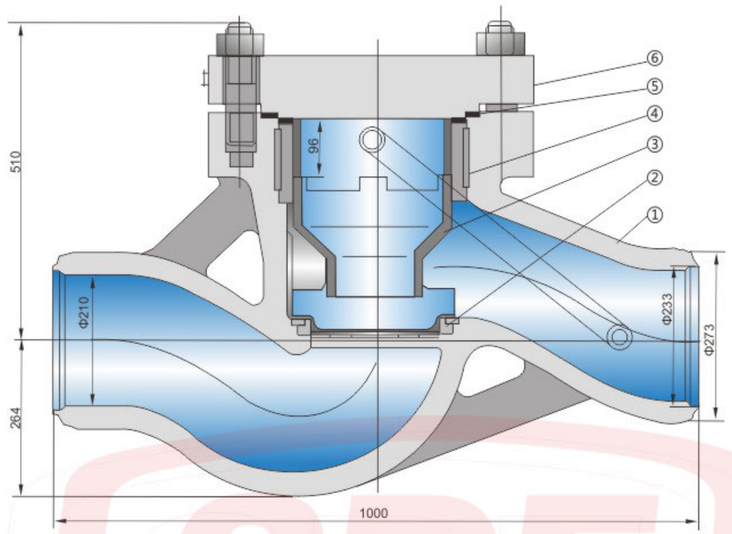

用途
安装在水平管道，作为自动防止介质逆流的安全装置。

结构简述
1. 阀瓣作升降运动，连通管使阀瓣的上腔与阀门出口连通，在阀瓣升起与回落时，减少了冲击和振动，并使阀瓣达到全行程。
2. 阀体上腔采用不锈钢导向套，保证阀瓣动作灵活。
3. 阀瓣与阀座阀门面采用钴基硬质合金等离子喷焊而成，硬度高、抗冲蚀、抗擦伤性能好。

Use
Installed in a horizontal pipe, as a safety device to prevent the media from countercurrent.

Structure Description
1. The valve for the lifting movement, connecting the valve to the upper valve and valve outlet connected to the valve flap rise and fall, reducing the impact and vibration, and the valve to reach the full trip.
2. The valve body with stainless steel guide sleeve, to ensure that the valve flap flexibility.
3. Valve and valve seat valve surface using cobalt-based carbide plasma spray welding, high hardness, anti-erosion, anti-scratch performance.

主要零件材料　Material Formain Parts

件号 Part Number	1	2	3	4	5	6
零件名称 Part Name	阀体 Body	阀座 Seat	阀瓣 Disc	导向套 Guide sleeve	缠绕垫 Winding pad	阀盖 Bonnet
材料 Material	碳钢 Carbon steel	碳钢 Carbon steel	碳钢 Carbon steel	不锈钢 stainless steel	填充柔性石墨 Flexible graphite	碳钢 Carbon steel

注：如有产品参数疑问请致电上海电站阀门有限公司详询，电话：021-59222288

Note: If the product parameters, please call our company detailed inquiry, Tel: 021-59222288

Special Power Station-stop-check Valve
电站特殊专用阀门之三截止-止回阀

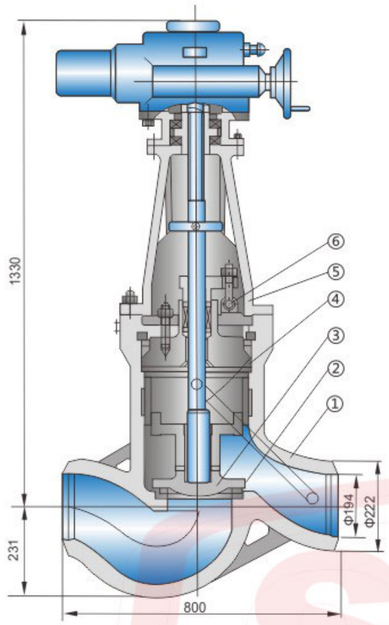

结构简述
1. 阀门采用压力自紧式密封，介质压力越高，密封性能越好，密封圈采用成型石棉盘根。
2. 阀瓣在阀体内作升降运动，运行前先将阀杆提起，靠介质压力将阀门自动打开。当锅炉发生故障时，阀门入口压力降低，介质倒流将阀门快速关闭。
3. 阀门支架与电动装置相连，使阀门达到更好的密封。
4. 阀瓣和阀座密封而采用钴基硬质合金等离子喷焊而成，耐磨、抗擦伤性能良好。
5. 阀杆表面经抗蚀性氮化处理，具有良好的抗腐蚀性和抗擦伤性。
6. 阀门可进行手、电动切换，手动时自动切断电源，手轮顺时针旋转为关闭阀门。

Brief Structure
1. Valve pressure from the tight seal, the higher the medium pressure, the better the sealing performance, the use of molding ring asbestos packing.
2. Valve in the valve body for lifting movements, before the operation of the stem lift, press the media pressure will automatically open the valve. When the boiler fails, the valve inlet pressure decreases, the media back to the valve quickly shut down.
3. Valve bracket and electric device connected to the valve to achieve a better seal.
4. Valve and valve seat seal and the use of drilling-based carbide plasma spray welding, wear, anti-scratch performance.
5. Stem surface corrosion treatment by nitriding, with good corrosion resistance and scratch resistance.
6. The valve can be hand, electric switch, manually cut off the power automatically, hand wheel clockwise rotation to close the valve.

用途
截止-止回阀安装在联合循环余热炉的主蒸汽管道上，作为防止介质倒流，当锅炉发生故障，靠介质压力快速将阀门关闭，对锅炉起到安全保护作用。

安装说明
1. 阀门必须垂直安装在管道上，阀杆向上，介质从阀座下而流入。
2. 电动装置环境温度为-20℃～40℃，相对于温度80%，无腐蚀，无爆炸性气体环境中。
3. 电动装置环境用于管道温度低于350℃时，则采用半流体锂基润滑油(Q/SY1002-65)，用于管道温度高于350℃时．则采用GB492-2N-4 钠基润滑脂进行润滑。

Use
Cut-off valve installed in the combined steam engine on the main steam pipe, as to prevent the media back, when the boiler failure, the media pressure quickly shut the valve, the boiler play a security role.

Installation Notes
1.The valve must be vertically mounted on the pipeline, with the stem upward and the medium flowing in under the seat ring.
2.Place the electric actuator in such an environment as non-corrosive non-explosive gas and with the ambient temperature-20~40°C and the related humidity 80%.
3.For the electric actuator, when used with the pipeline of a temperature below 350°C, use semi-fluid Li-base lubricating oil(Q/SY1002-65) and, when the said temperature is higher than 350°C,use GB492-2N-4 sodium-base lubricating grease.

主要零件材料　Material Formain Parts

件号 Part Number	1	2	3	4	5	6
零件名称 Part Name	阀体 Body	阀座 Seat	阀瓣 Disc	阀杆 stem	支架 Yoke	填料室座 Filling room
材料 Material	铬钼钒钢 CrMoV	铬钼钢 Cr.Mo steel	铬钼钒钢 CrMoV	渗氮钢 Nitriding steel	碳钢 Carbon steel	铬钼钢 Cr.Mo steel

电动装置选择按下表　The Electric Device Chooses To Press The Table

口径压力 Diameter pressure	电装型号 Electric actuator model	公称转矩/N•m Rated torque	电装生产厂家 Manufacturer
200/PW505.3V	DZW180	1800	用户自选 User selected

Special Power Station-check Valve
电站特殊专用阀门之四止回阀

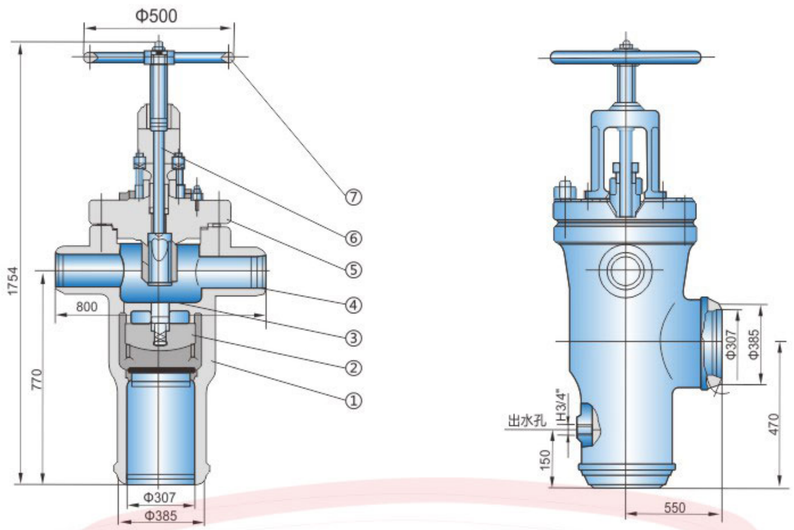

用途

安装在200MW机组高压加热器出口给水管道上与入口阀配套使用，当入口阀关闭同时止回阀关闭，给水切换到旁路，高压加热器安全解列。

说明

1. 阀门应垂直安装。
2. 阀座密封面采用钴基硬质合金等离子喷焊而成，耐磨抗擦伤性能好。
3. 阀杆表面经抗蚀性氮化处理，具有良好的抗腐蚀性和抗擦伤性。
4. 投运时用手轮将阀杆旋起到最高位置。

Use

Install in 200MW high pressure heater outlet water supply line with inlet valve supporting use, when inlet valve close and check valve close, water supply switch to bypass, high pressure heater security solution column.

Instruction

1. Valve should be installed vertically.
2. The seat sealing surface is made of cobalt base hard alloy plasma, which is good for abrasion resistance and abrasion resistance.
3. The stem surface is treated with corrosion resistance and has good corrosion resistance and abrasion resistance.
4. Use the handwheel to swing the stem to the highest position.

主要零件材料

序号	零件名称	材料
1	阀体	碳钢
2	阀瓣	碳钢
3	阀杆	渗氮钢
4	轴套	铝青铜
5	阀盖	碳钢
6	阀杆	渗氮钢
7	手轮	铸铁

Material Formain Parts

No.	Part Name	Material
1	Body	Carbon steel
2	Disc	Carbon steel
3	Stem	Nitriding steel
4	Bushings	Aluminum bronze
5	Bonnet	Carbon steel
6	Stem	Nitriding steel
7	Hand wheel	cast iron

注：如有产品参数疑问请致电上海电站阀门有限公司详询，电话：021-59222288

Note: If the product parameters, please call our company detailed inquiry, Tel: 021-59222288

DJ961HY Type Vacuum Exhaust Steam Valve
DJ961HY型向空排汽阀

主要性能规范 Main Performance Specifications

公称通径 DN(mm)	公称压力 PN(MPa)	工作温度(°C) Working temp	适用介质 Applicable medium	连接方式 Connection method	驱动方式 Drive mode
15~150mm	10~42MPa	≤610°C	水、蒸汽、水蒸气相混合 Water, steam, water vapor	对焊连接 Butt welding	手动、电动、气动、齿轮传动 Manual, electric, pneumatic, gear drive

概述

电站锅炉或工业锅炉上，均配备有向空排汽阀，作为锅炉启动时向空排汽，调节锅炉蒸汽温度在规定范围之内。在正常运行时，当锅炉压力、温度升高，又不 希望锅炉安全门动作，采用向空排汽阀进行降压、降温、由此可见，向空排汽阀的工作条件十分恶劣，启动时往往排出的是汽水混合物，工作状态下排出的是全压状态的高温高压过热蒸汽。假如采用通用截止阀，在温差大，压差大的恶劣环境下频繁使用，阀座与阀芯就会产生裂纹或汽蚀泄漏，大大缩短阀门的使用寿命。

根据上述情况，上海电站阀门厂有限公司专门设计研制了DJ961HY型向空排汽阀，它是一种新型阀门，能承受≤540℃的高温，≤32MPa的压差，适用于过热蒸汽等场合。

特点

DJ961HY型向空排汽阀结构特点是采用介质逆流(高进低出)，具有截止与止回双重功能，阀盖与阀体连接系自密封结构，关闭时自压达到100%密封，阀门设计成大小双阀芯，解决压差大而开启难的问题。阀座与阀芯堆焊特殊合金有耐磨性与坚韧性，采用锥度密封，线状密封面，在温差大的条件下，不会变形，不易开裂。

工作原理

DJ961HY型向空排汽阀是由电动装置和向空排汽阀体两部分组成。由电动头产生轴向力，带动阀杆动作，使阀门完全开启或完全关闭(不能作调节使用)，来完成系统运行的要求。电动装置可根据用户系统上的要求或指定的厂家来配置。

Overview

Power plant boiler or industrial boiler is definitely installed with vacuum exhaust steam valve, which is used to exhaust steam and adjust boiler steam temperature within specified range in time of boiler startup. During normal operation, when the pressure and temperature of boiler increase and boiler safety door is not required to be actuated, vacuum exhaust steam valve can be used to reduce pressure and temperature Thus it can be seen that the operating condition of vacuum exhaust steam valve is quite bad. Mixture of gas and water is usually exhausted in time of startup while what is exhausted is high temperature and pressure over heat steam under full pressure state in the operating state. If all-purpose stop valve is adopted and used frequently under bad condition of large temperature and pressure difference, valve seat and valve core will produce crack or cavitation leakage, greatly shortening the service lifetime of valve. According to the above instances, Shanghai Power Plant Valve Co.,LTD Factory has specially designed and developed DJ961HY type vacuum exhaust steam valve, which is a new king of valve and can endure the high temperature no more than 540℃ and pressure difference no more than 32MPa.It is applied to the occasions like over heat steam.

Features

DJ961HY type to the air discharge valve structure is characterized by the use of medium countercurrent (high into the low), with cut-off and check the dual function, the valve cover and the valve body is self-sealing structure, closed when the pressure to 100% sealed, Into the size of the double spool, to solve the problem of large pressure and difficult to open. Seat and spool welding special alloy wear resistance and toughness, the use of taper seal, linear sealing surface, in the temperature difference conditions, will not be deformed, easy to crack.

Working Principle

DJ961HY type to the air exhaust valve by the electric device and the air exhaust valve body composed of two parts. By the electric head to produce axial force, driven stem action, so that the valve is fully open or completely closed (can not be used for adjustment), to complete the system operation requirements. The electric device can be configured according to the requirements of the user system or the specified manufacturer.

主要零件材料

序号	名称	材料
1	阀体	20CrMoV, P91, C12A
2	支架	WCB
3	密封材料	柔性石墨
4	密封面	D802/D812+特殊过渡层
5	阀瓣	12Cr1MoV, F92
6	阀杆	25Cr2MoV
7	阀杆螺母	铝青铜

Material Formain Parts

No.	Part Name	Material
1	Body	20CrMoV, P91, C12A
2	Yoke	WCB
3	Sealing material	Flexible graphite
4	Sealing surface	D802/D812+Special transition layer
5	Disc	12Cr1MoV, F92
6	stem	25Cr2MoV
7	stem nut	Aluminum bronze

注：如有产品参数疑问请致电上海电站阀门有限公司详询，电话：021-59222288

Note: If the product parameters, please call our company detailed inquiry, Tel: 021-59222288

DJ961HY Type Vacuum Exhaust Steam Valve
DJ961HY型向空排汽阀

DJ961HY型向空排汽阀简图
DJ961HY type to empty exhaust valve diagram

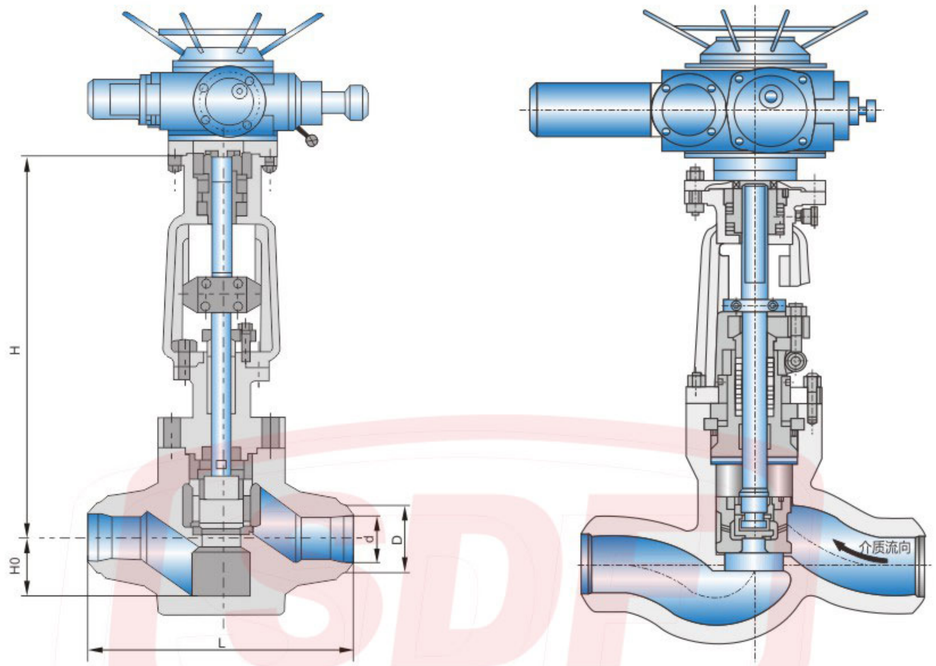

主要外形尺寸和连接尺寸　Main Dimensions and Connection Dimensions

公称通径DN(mm)	L	D1	D2	D3	α	H
DJ961HY-100, 200, 250, 320　DJ961HY-P54100V, P54140V, P54170V						
15	150	17	40	/	37.5°	518
20	170	22	46	/	37.5°	518
25	170	26	46	/	37.5°	518
32	180	31	49	/	37.5°	560
40	230	38	60	/	37.5°	545
50	320	50	90	/	32°	748
65	330	69	104	115	32°	829
80	470	84	110	140	32°	898
100	560	107	148	170	32°	913
125	660	128	168	190	32°	965
150	700	158	194	240	32°	1130

注：如有产品参数疑问请致电上海电站阀门有限公司详询，电话：021-59222288
Note: If the product parameters, please call our company detailed inquiry, Tel: 021-59222288

Quick Closure Steam Extraction Check Valve
快速关闭抽汽止回阀

用途

快速关闭抽汽止回阀又名快关逆止阀或快关门，该阀主要用于紧急止回和电厂汽轮机管路系统，在汽轮机突然失压的情况下，能在0.5~1s关闭、防止管路系统蒸汽和冷凝水倒流而导致汽轮机损坏。

特点

该阀由阀门本体、快速助关装置与控制系统组成。
阀瓣采用大角度斜置式，也有旋启及升降接触式，由气(液)压缸助关，使阀瓣在0.5~1s的时间内实现快速关闭。
阀瓣采用金属硬密封结构，通过气(液)压缸作用在阀瓣的推力，不仅可以达到快速关闭、止回的作用，在低压差的情况下还可以起到截止的作用。
密封副采用硬面接触，阀瓣密封面使用高耐磨材料对焊加工而成，提高了阀瓣在高流速的介质下的耐磨性和冲刷性能，并且提高了阀门在高温、高压的工况下的密封性能。
该阀可适用于水、气体、蒸汽、油品等场合，适用温度为-29~590°C

工作原理

(1)正常状态

当汽轮机开始工作时，电磁铁得电、高压油(压缩空气)经电磁阀进入抽汽止回阀的动作油(气)缸的有杆腔，推动活塞向上移动，阀瓣在介质的压力下打开，动作油缸的无杆腔通过电磁阀回油、气动则通过快速式排气阀排气。电磁铁失电，高压油(压缩空气)经电磁阀进入抽汽止回阀的动作油(气)缸的有杆腔，使阀瓣快速关闭，并保持抽(气)缸内的压力。

(2)事故状态

事故电信号使电磁铁失电，电磁阀复位，动作油(气)缸的有杆腔切换到回油(排气)，同时动作油(气)缸的无杆腔进高压油(压缩气)，使阀瓣动作，快速切断管路。

Use

Quick closure steam extraction check valve is also called quick closure inverted valve or quick shutdown.This valve is mainly applied to the emergent non-return and pipeline system of power plant steam turbine.It can shut down within 0.5~1s to avoid damaging steam turbine due to the inverse flow of steam and condensed water inside pipeline system

Feature

This valve consists of valve body,quick clasedown assistance device and control system.Valve flap adopts large angle oblique placement to shorten on-off stroke of startup and shutoff.There are also gas(liquid) cylinder to help closure and quickly shut down vlave flap within 0.5~1s.
This vlave adopts eccentric metal hard seal structure.Through the thrust functioned by gas (liquid) cylinder on valve flap,the valve can not only achieve quick closure and non-return function but also perform disconnection function under the condition of low pressure difference.
Seal gland adopts hard surface contact and valve flap seal surface is processed through resurfacing welding by utilizing high-abrasion material to have enhanced abrasion and flushing performance of valve flap under the medium with high flow speed,thus enhancing seal performance of valve under operatingcondition of high temperature and pressure. Optimized valve rod eccentric position makes valve flap at smaller rotary moment of inertia in time of closure to reduce the impact of valve flap seal surface on valve seat.Unique oblique cone seal surface structure can ensure reliable seal as well as smooth startup and shutoff,and will not result in seizure phenomenon of valve flap due to quick closure and high pressure. Three-dimensional accentric hard seal structure realizes non-friction of seal gland in time of startup and shutoff,namely separation after startup and seal after closing contact.It can automatically compensate the abrasion of seal surface caused by long-term use,thus greatly enhancing service lifetime of valve. This vlave can be applied to occasions such as water,gas,steam,petroleum products.Applicable temperature:-29~425°C(carbon steel), -29~550°C. (alloy steel), -196~600°C(stainless steel).

Working Principle

(1) normal state
When the turbine starts to work, the electromagnet is energized and the high pressure oil (compressed air) enters the rod of the action oil (gas) cylinder of the extraction check valve via the solenoid valve to push the piston upwards and the valve is under pressure Open, action cylinder rodless cavity through the solenoid valve back to the oil, pneumatic exhaust through the exhaust valve. Electromagnet loss of power, high pressure oil (compressed air) through the solenoid valve into the extraction valve check valve action oil (gas) cylinder of the rod cavity, so that the valve quickly closed, and keep pumping (gas) cylinder pressure.

(2) the state of the accident
The electric signal of the accident causes the electromagnet to lose power, the solenoid valve is reset, the lever of the action oil (gas) cylinder is switched to the oil return (exhaust), and the rod of the action oil (gas) , So that the valve flap action, quickly cut off the pipeline.

主要零件材料　Material Formain Parts

序号	名称	材料
1	支架	WCB
2	活塞杆	1Cr18Ni9Ti
3	密封材料	石墨、聚四氟乙烯
4	阀体	碳钢，合金钢
5	密封面	W, 507/507Mo, STL6/STL12
6	阀瓣	碳钢，合金钢
7	阀杆	1Cr18Ni9Ti

No.	Name	Material
1	Yoke	WCB
2	cylinder rod	1Cr18Ni9Ti
3	sealing material	Graphite, PTFE
4	Body	Carbon steel, alloy steel
5	seal face	W, 507/507Mo, STL6/STL12
6	Dise	Carbon steel, alloy steel
7	stem	1Cr18Ni9Ti

注：如有产品参数疑问请致电上海电站阀门有限公司详询，电话：021-59222288
Note: If the product parameters, please call our company detailed inquiry, Tel: 021-59222288

快速关闭抽汽止回阀简图(如下所示)
Quick Close Steam Extraction Check Valve (see below)

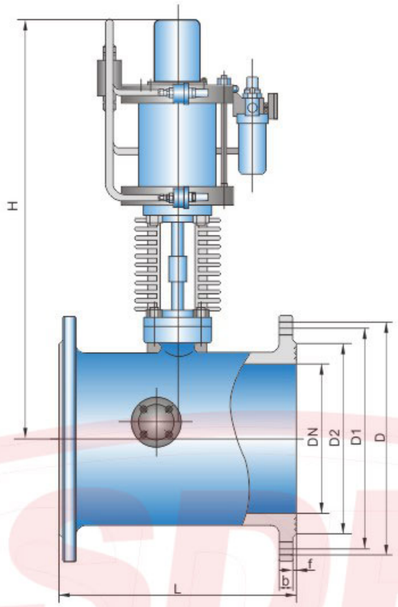

主要外形尺寸和连接尺寸 Main Dimensions and Connection Dimensions

DN(mm)	D	D1	D2	b	f	Z-Φd	L	H
100	215	180	155	20	3	8-18	250	610
125	245	210	185	22	3	8-18	280	645
150	280	240	210	24	3	8-23	300	675
200	335	295	265	26	3	12-23	330	692
250	405	355	320	30	3	12-25	370	670
300	460	410	375	30	4	12-25	400	845
350	520	470	435	34	4	16-25	450	877
400	580	525	485	36	4	16-30	500	925
450	640	585	545	40	4	20-30	550	1025
500	705	650	608	44	4	20-34	600	1120
600	840	770	718	48	5	20-41	650	1350
700	910	840	788	50	5	24-41	700	1480
800	1020	950	898	52	5	24-41	740	1670

注：如有产品参数疑问请致电上海电站阀门有限公司详询，电话：021-59222288
Note: If the product parameters, please call our company detailed inquiry, Tel: 021-59222288

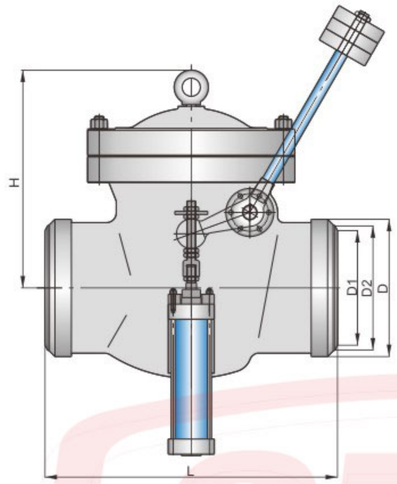

旋启式

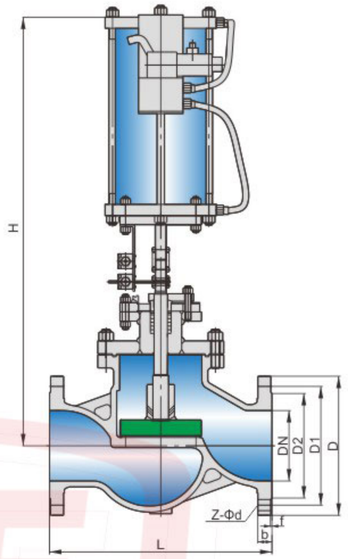

升降式

主要外形尺寸和连接尺寸 Main Dimensions and Connection Dimensions

旋启式 Swing type

DN	L	D	D1	D2	H
150	485	190	145	165	350
200	525	260	201	225	410
250	560	310	251	280	440
300	900	400	312	377	480
350	1025	460	366	426	530
400	1150	530	410	498	630
500	1400	605	500	576	750
600	920	680	610	660	990
700	1000	800	720	770	1100
800	1100	910	830	880	1200

升降式 Lifting type

DN	L	D	D1	D2	b	f	Z-Φd	H
100	350	230	190	160	30	3	8-23	710
150	480	300	250	218	24	3	8-25	780
200	600	360	310	278	34	3	12-25	850
250	650	425	370	332	36	3	12-30	980
300	750	485	430	390	40	3	16-30	1150
350	850	550	490	448	44	3	16-34	1310

NK Series Vacuum Isolating Valve
NK系列真空隔离阀

主要特点及用途

1. 本系列阀门主体采用铸锻结构，具有平行双密封副半强制双向密封，密封面到位运动和楔形快楔紧运动分步作用实现零泄漏。
2. 密封面运动磨擦力小、启闭轻便，而且密封面磨损有自动补偿功能。
3. 结构简单、紧凑、检修方便，使用寿命长。
4. 阀盖填料室设有真空密封结构，具有自胀压紧作用，并且各接各面采用高强膨胀材料密封，便系统与大气完全隔离，具有很好的系统气密性。
5. 本系列阀门连接形式分法兰、焊接两种，驱动方式有手动、电动两种。
   该阀门适用于工作温度≤425°C和550°C，工作介质为水、蒸汽或空气的管路上，作为启闭装程；尤其适用于火电厂汽机冷凝和真空负压系统，起真空隔离密封作用。

Chief Structure Features and Usages

1. The main body of this series valve uses a casting and forging structure and has a dual-direction seal of parallel secondary semi-forced dual sealing and the motions of both the sealing face to its due position due podition and the tapered block to wedge-up are separated to have zero leadage come true.
2. The sealing face is of a small frictional force If motion,lightly opened and closed and has a self copensation function for wearing.
3. Simple and compact structure easy to more than 10 years of long duration.
4. A vacuum sealing structure is set in the filling chamber on the valve cover,which has the action of self-expanding and impacting,the joint faces are sealing with the ecpansive material of high strength to completely isolate the system from air.
5. Two comectin gways of b flange and welding,two ways to drive of heand-and eletric-operation. The valve can be used as the open & close device for the pipelines under the working temperature≤425℃ and 550℃ and the working medium of water,steam or air,especially suitable to act as the vacuum isolating sealing for the system of eteam turbine's condesation and vacuum negative pressure in steam power plants.

阀门结构型式

NKJ61型真空隔离截止阀；NKZ44, NKZ64型真空隔离闸板阀

制造验收技术标准

1. 制造验收技术条件参照GB/T 12234, GB/T 12235.
2. 阀门结构长度按GB/T 12221.
3. 阀门法兰尺寸按JB/T 78-79, GB/T 9112-9124.

Valve Ctrucure Type

Mode1 NKJ61 Vacuum isolating stop valve;Model NKZ44 and NKZ64 Vacuum isolating gate valves.

Manufacture and Acceptance Standard

1. Manufacture,ecceptance and technical conditions per GB/T12234,GB/T12235.
2. Face-to face dimensions per GB/T12221.
3. Flange sizes per JB/T78-79,GB/T9112-9124.

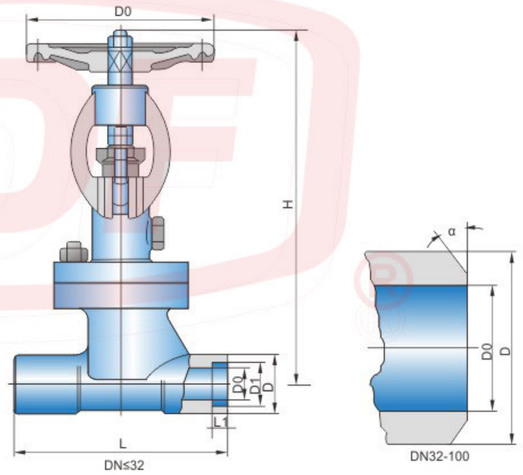

主要性能规范 Main Performance Specifications

产品类别 Product category	壳体强度试验(MPa) Shell strength test	上密封试验(MPa) Back seal test	密封试验(Mpa) Sealing test	适用介质 Applicable medium	适用温度(°C) Applicable Temp
NKJ61H-40	6.0	4.4	4.4	水、蒸汽、空气 Water, steam, air	≤425
NKJ61H-64	9.6	7.0	7.0		
NKJ61H-100	15.0	11.0	11.0		
NKJ61Y-40I	6.0	4.4	4.4		≤550
NKJ61Y-64I	9.6	7.0	7.0		
NKJ61Y-100I	15.0	11.0	11.0		

主要零件材料 Material Formain Parts

零件名称 Part name	阀体、阀盖 Body, bonnet	阀杆 Stem	阀瓣 Disc	密封面 Sealing surface	阀杆螺母 Stem nut	填料 Packing	紧固件 Fastener
NKJ61H-C	25或WCB 25 or WCB	铬不锈钢 Cr. stainless steel	铬不锈钢 Cr. stainless steel	H:合金钢 H: Alloy steel	铝青铜 Aluminum bronze	膨胀复合石墨 Expanded Graphite	优质碳钢 HQ carbon steel
NKJ61Y-I	铬钼钢 Cr.Mo steel	25Cr2MoV	12Cr1Mo1VA	Y:硬质合金 Y:Carbide			铬钼钢 Cr.Mo steel

Vacuum Isolated Globe Valve
真空隔离截止阀

主要外形尺寸和连接尺寸 Main Dimensions and Connection Dimensions

公称通径 DN(mm)	L	H手 (Hand Wheel)	D	D0	D1	L1	α	W
4.0MPa								
10	130	245	36	11	18.4	10		120
15	130	245	36	16	22.5	10		120
20	150	265	44	21	28.5	11		160
25	160	270	48	26	34.5	12		200
32	180	285	48	34			37°30'	200
40	200	320	55	40			37°30'	240
50	230	365	64	48			37°30'	320
65	290	410	82	66			37°30'	300
80	310	430	95	78			37°30'	300
100	350	470	117	100			37°30'	350
125	400	500	143	126			37°30'	350
150	480	533	167	150			37°30'	400
6.4MPa								
10	130	245	36	10	18.4	10		120
15	130	245	36	15	22.5	10		120
20	150	265	44	20	28.5	11		160
25	160	270	48	25	34.5	12		200
32	180	280	48	33			37°30'	200
40	200	320	55	39			37°30'	240
50	230	365	64	48			37°30'	320
65	290	410	82	65			37°30'	320
80	310	430	95	76			37°30'	360
100	350	470	117	98			37°30'	400
125	480	500	143	123			37°30'	400
150	480	533	167	148			37°30'	500
10.0MPa								
10	130	245	36	10	18.4	10		120
15	130	245	36	14	22.5	10		120
20	150	265	44	20	28.5	11		160
25	160	270	48	25	34.5	12		200
32	180	285	48	32			37°30'	200
40	200	320	55	38			37°30'	240
50	230	355	64	48			37°30'	320
65	290	410	82	63			37°30'	320
80	310	430	95	74			37°30'	360
100	350	470	117	97			37°30'	400
125	400	500	143	123			37°30'	400
150	480	533	167	148			37°30'	500

注：如有产品参数疑问请致电上海电站阀门有限公司详询，电话：021-59222288
Note: If the product parameters, please call our company detailed inquiry, Tel: 021-59222288

Vacuum Isolated Gate Valve
真空隔离闸阀

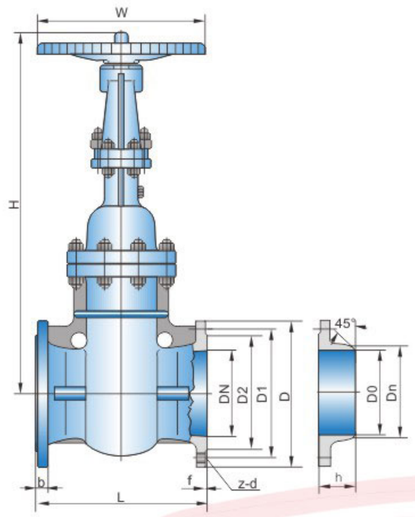

PN≤2.5MPa

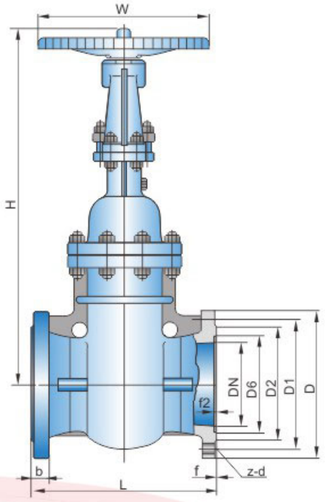

PN≤4.0MPa

主要性能规范 Main Performance Specifications

公称压力 PN(MPa)	壳体强度试验 Shell strength test	上密封试验压力 Back seal test	密封试验压力(MPa) Seal test pressure
1.0	1.5	1.1	1.1
1.6	2.4	1.8	1.8
2.5	3.8	2.8	2.8
4.0	6.0	4.4	4.4
6.4	9.6	7.0	7.0
10.0	15.0	11.0	11.0

使用范围 Use Range

产品类别 Product category	适用介质 Applicable medium	适用温度 Applicable Temp(°C)
NKZ41H-C型 NKZ44H-C型 NKZ941H-C型 NKZ944H-C型	水、蒸汽、空气 Water, steam, air	≤425°C
NKZ41Y-I型 NKZ44Y-I型 NKZ941Y-I型 NKZ944Y-I型	水、蒸汽、空气 Water, steam, air	≤550°C

主要零件材料 Material Formain Parts

零件名称 Part name	阀体、阀盖 Body, Bonnet	阀杆 Stem	闸板 Disc	阀座密封面 Seat sealing surface	阀杆螺母 stem nut	填料 Packing	紧固件 Fasteners
NKZ41H-C NKZ44H-C NKZ941H-C NKZ944H-C	WCB	2Cr13	25	H:合金钢 H:alloy steel	铝青铜 Aluminum bronze	膨胀复合石墨 Expanded Graphite	优质碳钢 HQ carbon steel
NKZ41H-I NKZ44H-I NKZ941H-I NKZ944H-I	铬钼钢 Cr.Mo steel	25CrMoV	铬钼钢 Cr.Mo steel	Y:硬质合金 Y:Carbide	铝青铜 Aluminum bronze	膨胀复合石墨 Expanded Graphite	铬钼钢 Cr.Mo steel

Vacuum Isolated Gate Valve
真空隔离闸阀

NKZ41(H)/NKZ44H-10C,16C,25,40,64,100 NKZ44Y-10I,16I,25I,40I,64I,100I

主要外形尺寸和连接尺寸 Main Dimensions and Connection Dimensions

公称通径 DN(mm)	L	H	D	D1	D2	b	f	z-d	W	附法兰尺寸(mm) With flange size		
										h	D0	DN
1.0MPa												
50	250	345	160	125	100	16	3	4-18	250	45	49	58
65	270	395	180	145	120	18	3	4-18	250	48	64	75
80	280	425	195	160	135	20	3	4-18	300	50	78	97
100	300	510	215	180	155	20	3	8-18	300	52	96	110
125	325	570	245	210	185	22	3	8-18	350	60	120	136
150	350	725	280	240	210	24	3	8-18	350	60	145	163
200	400	820	335	295	265	26	3	8-18	400	62	202	223
250	450	890	390	350	320	28	3	12-23	400	62	225	278
300	500	1070	440	400	368	28	3	12-23	450	65	303	330
350	550	1320	500	460	428	30	4	16-23	550	65	351	382
400	600	1450	565	515	482	32	4	16-25	550	65	398	432
450	650	1560	615	565	532	32	4	20-25	600	70	460	485
500	700	1720	670	620	585	34	4	20-25	650	78	500	535
600	800	1880	780	725	685	36	5	20-30	700	90	600	636
700	900	2085	895	840	800	40	5	24-30	750	90	690	726
800	1000	2590	1010	950	905	44	5	24-34	800	106	790	826
1.6MPa												
50	250	345	160	125	100	16	3	4-18	250	48	49	58
65	270	395	180	145	120	18	3	4-18	250	50	64	75
80	280	425	195	160	135	20	3	8-18	300	52	78	91
100	300	510	215	180	155	20	3	8-18	300	52	96	110
125	325	570	245	210	185	22	3	8-18	350	60	120	136
150	350	725	280	240	210	24	3	8-23	350	60	145	163
200	400	820	335	295	265	26	3	12-23	400	62	201	223
250	450	890	405	355	320	30	3	12-25	450	68	253	278
300	500	1070	460	410	375	30	3	12-25	550	70	303	330
350	550	1320	520	470	435	34	4	16-25	600	78	351	382
400	600	1450	580	525	485	36	4	16-30	650	90	398	432
450	650	1560	640	585	545	40	4	20-30	700	95	450	485
500	700	1720	705	650	608	44	4	20-34	750	98	500	535
600	800	1880	840	770	718	48	5	20-41	800	105	600	636
700	900	2085	910	840	788	50	5	24-41	850	110	690	726
800	1000	2590	1020	950	898	52	5	24-41	950	115	790	826

注：如有产品参数疑问请致电上海电站阀门有限公司详询，电话：021-59222288

Note: If the product parameters, please call our company detailed inquiry, Tel: 021-59222288

Vacuum Isolated Gate Valve
真空隔离闸阀

主要外形尺寸和连接尺寸 Main Dimensions and Connection Dimensions

公称通径 DN(mm)	L	H	D	D1	D2	b	f	z-d	W	附法兰尺寸(mm) With flange size		
										h	D0	DN
2.5MPa												
50	250	345	160	125	100	20	3	4-18	250	48	49	64
65	270	395	180	145	120	22	3	8-18	250	52	66	82
80	280	425	195	160	135	22	3	8-18	300	55	78	95
100	300	510	230	190	160	24	3	8-23	300	62	100	117
125	325	570	270	220	188	28	3	8-25	350	68	125	144
150	350	725	300	250	218	30	3	8-25	350	72	151	172
200	400	820	360	310	278	34	3	12-25	400	60	201	223
250	450	890	425	370	332	36	3	12-30	450	85	253	278
300	500	1070	483	430	390	40	4	16-30	550	92	303	330
350	550	1320	550	490	448	44	4	16-34	650	98	351	382
400	600	1450	610	550	505	48	4	16-34	700	115	398	432
450	650	1560	660	600	555	50	4	20-34	750	115	450	483
500	700	1720	730	660	610	52	4	20-41	800	120	498	535
600	800	1880	840	770	718	56	5	20-41	850	130	598	636
700	900	2085	955	875	815	60	5	24-48	900	140	688	726
800	1000	2590	1070	990	930	64	5	24-48	1000	150	788	826

主要外形尺寸和连接尺寸 Main Dimensions and Connection Dimensions

公称通径 (mm)	L	H	D	D1	D2	b	f	D6	f2	z-d	W	附法兰尺寸(mm)		
												h	D0	DN
4.0MPa														
50	250	345	160	125	100	20	3	88	4	4-18	300	48	48	64
65	270	395	180	145	120	22	3	110	4	8-18	300	52	66	82
80	280	425	195	160	135	22	3	121	4	8-18	350	58	78	95
100	300	510	230	190	160	24	3	150	4.5	8-23	350	68	100	117
125	325	570	270	220	188	28	3	176	4.5	8-25	400	68	125	144
150	350	725	300	250	218	30	3	204	4.5	8-25	400	72	151	172
200	400	820	375	320	282	38	3	260	4.5	12-30	450	88	199	223
250	450	890	445	385	345	42	3	313	4.5	12-34	550	102	251	278
300	500	1070	510	450	408	46	4	364	4.5	16-34	650	116	301	330
350	550	1320	570	510	465	52	4	422	5	16-34	750	120	349	382
400	600	1450	655	585	535	58	4	474	5	16-41	850	142	396	432

注：如有产品参数疑问请致电上海电站阀门有限公司详询，电话：021-59222288
Note: If the product parameters, please call our company detailed inquiry, Tel: 021-59222288

主要外形尺寸和连接尺寸 Main Dimensions and Connection Dimensions

公称通径 DN(mm)	L	H	D	D1	D2	b	f	D6	f2	z-d	W	附法兰尺寸(mm) With flange size		
												h	D0	DN
6.4MPa														
50	250	350	175	135	105	26	3	88	4	4-23	300	70	48	64
65	280	405	200	160	130	28	3	110	4	8-23	300	75	65	82
80	310	435	210	170	140	30	3	121	4	8-23	350	75	76	95
100	350	515	250	200	168	32	3	150	4.5	8-25	400	88	98	117
125	400	580	295	240	202	36	3	176	4.5	8-30	400	98	128	150
150	450	735	340	280	240	38	3	204	4.5	8-34	450	110	149	172
200	550	835	405	345	300	44	3	260	4.5	12-34	550	116	197	223
250	650	905	470	400	352	48	3	313	4.5	12-41	650	122	245	278
300	750	1080	530	460	412	54	4	364	4.5	16-41	750	136	293	330
350	850	1340	595	525	475	60	4	422	5	16-41	800	154	341	382
400	950	1460	670	585	525	66	4	474	5	16-48	900	170	386	432

主要外形尺寸和连接尺寸 Main Dimensions and Connection Dimensions

公称通径 DN(mm)	L	H	D	D1	D2	b	f	D6	f2	z-d	W	附法兰尺寸(mm) With flange size		
												h	D0	DN
10.0MPa														
50	250	350	195	145	112	28	3	88	4	4-25	300	72	48	64
65	280	405	220	170	138	32	3	110	4	8-25	300	84	63	82
80	310	435	230	180	148	34	3	121	4	8-25	350	90	74	95
100	350	515	265	210	172	38	3	150	4.5	8-30	400	100	97	117
125	400	580	310	250	210	42	3	176	4.5	8-34	400	115	124	150
150	450	735	350	290	250	46	3	204	4.5	12-34	450	130	144	172
200	550	835	430	360	312	54	3	260	4.5	12-41	550	145	189	223
250	650	905	500	430	382	60	3	313	4.5	12-41	650	170	235	278
300	750	1080	585	500	442	70	4	364	4.5	16-48	750	195	281	330
350	850	1340	655	560	498	76	4	422	5	16-54	850	210	333	382
400	950	1460	715	620	558	80	4	474	5	16-54	950	220	376	432

注：如有产品参数疑问请致电上海电站阀门有限公司详询，电话：021-59222288
Note: If the product parameters, please call our company detailed inquiry, Tel: 021-59222288

NKZ941(H)/NKZ944H-10C,16C,25,40,64,100 NKZ944Y-10I,16I,25I,40I,64I,100I

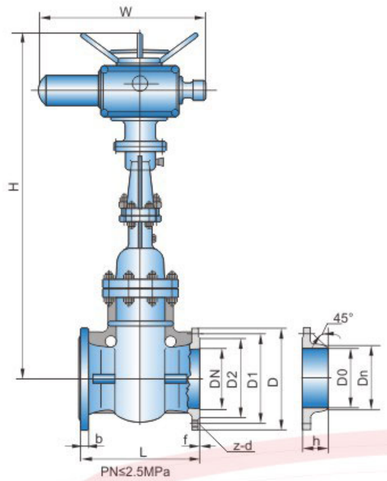

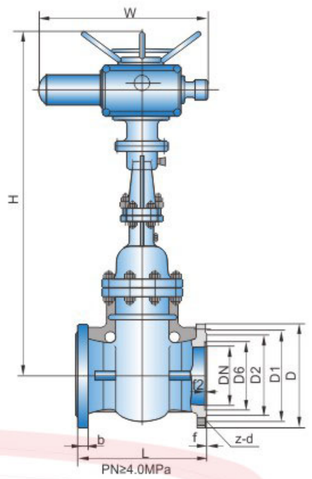

主要外形尺寸和连接尺寸 Main Dimensions and Connection Dimensions

DN (mm)	L	H	D	D1	D2	b	f	D6	f2	z-d	W	电装 Electric actuator	附法兰尺寸(mm) With flange size		
													h	D0	DN
1.0MPa															
50	250	618	160	125	100	16	3	/	/	4-18	562	DZW10	45	49	58
65	270	670	180	145	120	18	3	/	/	4-18	562	DZW10	48	64	75
80	280	700	195	160	135	20	3	/	/	4-18	562	DZW10	50	78	91
100	300	785	215	180	155	20	3	/	/	8-18	562	DZW10	52	96	110
125	325	845	245	210	185	22	3	/	/	8-18	607	DZW15	60	120	136
150	350	990	280	240	210	24	3	/	/	8-23	607	DZW15	60	145	163
200	400	1080	335	295	265	26	3	/	/	8-23	607	DZW20	62	201	223
250	450	1150	390	350	320	28	3	/	/	12-23	607	DZW20	65	253	278
300	500	1415	440	400	368	28	3	/	/	12-23	755	DZW45	65	303	330
350	550	1665	500	460	428	30	4	/	/	16-23	755	DZW45	65	351	382
400	600	1795	565	515	482	32	4	/	/	16-25	755	DZW60	65	398	432
450	650	1920	615	565	532	32	4	/	/	20-25	825	DZW90	70	450	485
500	700	2080	670	620	585	34	4	/	/	20-25	825	DZW90	78	500	535
600	800	2380	780	725	685	36	5	/	/	20-30	925	DZW180	90	600	636
700	900	2585	895	840	800	40	5	/	/	24-30	925	DZW180	90	690	726
800	1000	3090	1010	950	905	44	5	/	/	24-30	925	DZW250	106	790	826
1.6MPa															
50	250	618	160	125	100	16	3	/	/	4-18	562	DZW10	48	49	58
65	270	618	180	145	120	18	3	/	/	4-18	562	DZW10	50	64	75
80	280	700	195	160	135	20	3	/	/	8-18	562	DZW10	52	78	91
100	300	785	215	180	155	20	3	/	/	8-18	607	DZW15	52	96	110
125	325	845	245	210	185	22	3	/	/	8-18	607	DZW15	60	120	136
150	350	990	280	240	210	24	3	/	/	8-23	607	DZW20I	60	145	163
200	400	1080	335	295	265	26	3	/	/	12-23	607	DZW20	62	201	223
250	450	1150	403	355	320	30	3	/	/	12-25	607	DZW30	68	253	278
300	500	1415	460	410	375	30	3	/	/	12-25	755	DZW45	70	303	330
350	550	1665	520	470	435	34	4	/	/	16-25	755	DZW60	78	351	382
400	600	1795	580	525	485	36	4	/	/	16-30	755	DZW60	90	398	432
450	650	1920	640	585	545	40	4	/	/	20-30	825	DZW90	95	450	485
500	700	2080	705	650	608	44	4	/	/	20-34	825	DZW120	198	500	535
600	800	2380	840	770	718	48	5	/	/	20-41	925	DZW180	105	600	636
700	900	2585	910	840	788	50	5	/	/	24-41	925	DZW250	110	690	726
800	1000	3090	1020	950	898	52	5	/	/	24-41	1162	DZW350	115	790	826

Vacuum Isolated Gate Valve
真空隔离闸阀

主要外形尺寸和连接尺寸 Main Dimensions and Connection Dimensions

公称通径 DN(mm)	L	H	D	D1	D2	b	f	D6	f2	z-d	W	电动装置 Electric actuator	附法兰尺寸(mm) With flange size		
													h	D0	DN
2.5MPa															
50	25	618	160	125	100	20	3	/	/	4-18	562	DZW10	48	49	64
65	270	618	180	145	120	22	3	/	/	8-18	562	DZW10	52	66	82
80	280	700	195	160	135	22	3	/	/	8-18	562	DZW10	55	78	95
100	300	785	230	190	160	24	3	/	/	8-23	607	DZW15	62	100	117
125	325	845	270	220	188	28	3	/	/	8-25	607	DZW20I	68	125	144
150	350	990	300	250	218	30	3	/	/	8-25	607	DZW20I	72	151	172
200	400	1080	360	310	278	34	3	/	/	12-25	607	DZW30	80	201	223
250	450	1150	425	370	332	36	3	/	/	12-30	607	DZW30	85	253	278
300	500	1415	485	430	390	40	4	/	/	16-30	755	DZW45	92	303	330
350	550	1665	550	490	448	44	4	/	/	16-34	755	DZW60	98	351	382
400	600	1815	610	550	505	48	4	/	/	16-34	825	DZW90	115	398	432
450	650	1920	660	600	555	50	4	/	/	30-34	825	DZW120	115	450	485
500	700	2080	730	660	610	52	4	/	/	30-41	825	DZW120	120	498	535
600	800	2380	840	770	718	56	5	/	/	30-41	925	DZW180	130	598	631
700	900	2585	955	875	815	60	5	/	/	24-48	925	DZW250	140	688	726
800	1000	3180	1070	990	930	64	5	/	/	24-48	1162	DZW350	150	788	826
4.0MPa															
80	280	700	95	160	135	22	3	121	4	8-18	607	DZW15	58	78	95
100	300	785	230	190	160	24	3	150	4.5	8-23	607	DZW20	68	100	117
125	325	845	270	220	188	28	3	176	4.5	8-25	607	DZW20I	68	125	144
150	350	990	300	250	218	30	3	204	4.5	8-25	607	DZW30	72	151	172
200	400	1080	375	320	282	38	3	260	4.5	12-30	607	DZW30	88	199	223
250	450	1240	445	385	345	42	3	313	4.5	12-34	755	DZW45	102	251	278
300	500	1415	510	450	408	46	4	364	4.5	16-34	755	DZW60	116	301	330
350	550	1685	570	510	465	52	4	422	5	16-34	825	DZW90I	120	349	382
400	600	1815	655	585	535	58	4	474	5	16-41	825	DZW120	142	396	432
6.4MPa															
80	310	710	210	170	140	30	3	121	4	8-23	925	DZW20I	75	76	95
100	350	790	250	200	168	32	3	150	4.5	8-25	607	DZW20I	88	98	117
125	400	855	295	240	202	36	3	176	4.5	8-30	607	DZW30	98	128	151
150	450	1000	340	280	240	38	3	204	4.5	8-34	607	DZW30	110	149	172
200	550	1185	405	345	300	44	3	260	4.5	12-34	755	DZW45	116	197	223
250	650	1255	470	400	352	48	3	313	4.5	12-41	755	DZW60	122	245	278
300	750	1445	530	460	412	54	4	364	4.5	16-41	825	DZW90I	136	293	330
350	850	1705	595	525	475	60	4	422	5	16-41	825	DZW120I	154	341	382
400	950	1985	670	585	525	66	4	474	5	16-48	925	DZW180	170	386	432
10.0MPa															
80	310	710	230	180	148	34	3	121	4	8-25	607	DZW20I	90	74	95
100	350	790	265	210	172	38	3	150	4.5	8-30	607	DZW30I	100	97	117
125	400	855	310	250	210	42	3	176	4.5	8-33	607	DZW30	115	124	150
150	450	1090	350	290	250	46	3	204	4.5	12-34	755	DZW45	130	144	172
200	550	1185	430	360	312	54	3	260	4.5	12-41	755	DZW60	145	189	223
250	650	1275	500	430	382	60	3	313	4.5	12-41	825	DZW90I	170	235	278
300	750	1445	585	500	442	70	4	364	4.5	16-48	825	DZW120I	195	281	330
350	850	1870	655	560	498	76	4	422	5	16-54	925	DZW180	210	333	382
400	950	1985	715	620	558	80	4	474	5	16-54	925	DZW250	220	376	432

Scum Gate Valve, Throttle Valve, Wearable Scum Gate Valve
排渣闸阀、排渣节流阀、耐磨排渣闸阀

制造验收技术标准

1. 制造验收技术条件参照GB/T 12234
2. 阀门结构长度按GB/T 12221
3. 阀门法兰尺寸按JB/T 78-79, GB/T 9112-9124

Manufacture and Acceptance Standard

1. Manufacturing acceptance technical conditions refer to GB / T 12234
2. Valve structure length is GB/T 12221
3. Valve flange size by JB / T 78-79, GB / T 9112-9124

使用范围 Use Range

工作温度(°C) Working temp	≤425°C
阀体材料 Body material	碳钢 Carbon steel WCB
适用介质 Applicable medium	灰渣水混合物，渣水比≥1:15, 最大粒径≤50mm ≤50mm Mixture of water and ash residue with a ratio of residue: water≥ 1:15 and max. size≤50mm

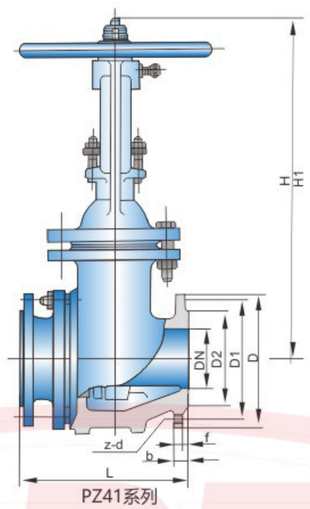

PZ41系列

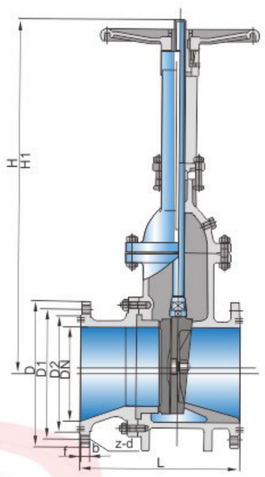

NPZ41系列

主要外形尺寸和连接尺寸 Main Dimensions and Connection Dimensions

尺寸 Size	DN(mm)	L	D	D1	D2	b	Z-Φd	H
PZ41H-(10C,16C) PL41H-(10C,16C) NPZ41H-(10C,16C) 电动排渣阀尺寸同上 高度重量外加电动装置 The size of the electric slag valve is the same as above High weight plus electric device	50	250	165	125	102	20	4-Φ18	335
	80	280	200	150	133	22	8-Φ18	510
	100	300	220	180	150	24	8-Φ18	685
	150	350	285	240	212	28	8-Φ22	790
	200	400	340	295	268	30	12-Φ22	885
	250	450	405	355	320	32	12-Φ26	1015
	300	500	460	410	370	34	12-Φ26	1190
	350	550	520	470	430	38	16-Φ26	1350
	400	600	580	525	482	40	16-Φ30	1460
	500	700	715	650	585	46	20-Φ33	1820
PZ41H-25 PZ941H-25 NPZ41H-25 NPZ941H-25 电动排渣阀尺寸同上 高度重量外加电动装置 The size of the electric slag valve is the same as above High weight plus electric device	50	250	165	125	102	20	4-Φ18	335
	80	280	200	150	133	22	8-Φ18	510
	100	300	235	190	158	24	8-Φ22	685
	150	350	300	250	212	30	8-Φ26	190
	200	400	360	310	278	34	12-Φ26	885
	250	450	425	370	335	36	12-Φ30	1015
	300	500	485	430	390	40	16-Φ30	1190
	350	550	555	490	450	44	16-Φ33	1350
	400	600	620	550	505	48	16-Φ36	1460
	450	650	670	600	555	50	20-Φ36	1620
	500	700	730	660	615	52	20-Φ36	1820
PL41H-25 PL941H-25 电动排渣阀尺寸同上 高度重量外加电动装置 The size of the electric slag valve is the same as above High weight plus electric device	150	400	300	250	212	30	8-Φ26	910
	200	500	360	310	278	34	12-Φ26	1100
	250	550	425	370	335	36	12-Φ30	1430
	300	650	485	430	390	40	16-Φ30	1558
	350	700	555	490	450	44	16-Φ33	1678
	400	750	620	550	505	48	16-Φ36	1830
	450	850	670	600	555	50	20-Φ36	1990
	500	900	730	660	615	52	20-Φ36	2160

Sediment-Draining Check Valve
排渣止回阀

主要性能规范 Main Performance Specifications

型号 Model	PH44H-10C	PH44H-16C	PH44H-25
公称压力(MPa) Nominal pressure	1.0	1.6	2.5
壳体试验压力(MPa) Shell test pressure	1.5	2.4	3.8
密封试验压力(MPa) Seal test pressure	1.1	1.76	2.8
工作温度(°C) Working temp	≤200		
工作压力(MPa) Working pressure	1.0	1.6	2.5
适用介质 Applicable medium	灰渣混合物 Ash mixture		

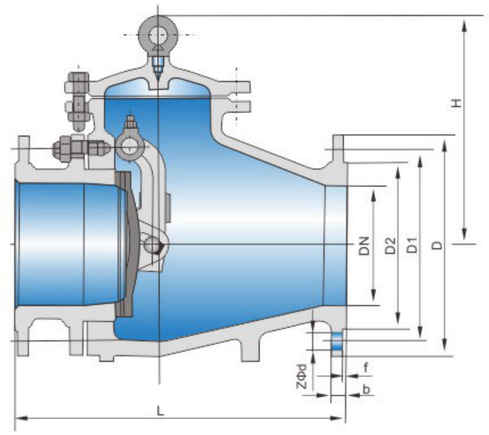

主要外形尺寸和连接尺寸 Main Dimensions and Connection Dimensions

DN(mm)	L	D	D1	D2	Z-Φd	b	f	H
PH44H-10C								
80	241	200	160	132	8-Φ18	20	3	260
100	292	220	180	156	8-Φ18	20	3	270
150	356	285	240	212	8-Φ22	22	3	290
200	495	340	295	268	8-Φ22	22	3	345
250	622	395	350	320	12-Φ22	24	3	412
300	698	445	400	370	12-Φ22	26	4	468
350	787	505	460	430	16-Φ22	28	4	524
400	900	565	515	482	16-Φ26	30	4	600
450	918	615	565	532	20-Φ26	32	4	670
500	978	670	620	585	20-Φ26	34	4	750
PH44H-16C								
80	241	200	160	132	8-Φ18	20	3	260
100	292	220	180	156	8-Φ18	20	3	270
150	356	285	240	212	8-Φ22	24	3	290
200	495	340	295	268	12-Φ22	24	3	345
250	622	405	355	320	12-26	26	3	412
300	698	460	410	370	12-Φ26	28	4	468
350	787	520	470	429	16-Φ26	30	4	524
400	900	580	525	480	16-Φ30	32	4	600
450	918	640	585	548	20-Φ30	34	4	670
500	978	705	650	608	20-Φ34	44	4	750
PH44H-25								
80	318	200	160	132	8-Φ18	24	3	260
100	356	235	190	156	8-Φ22	24	3	270
150	444	300	250	212	8-Φ26	28	3	290
200	535	360	310	278	12-Φ26	30	3	345
250	622	425	370	335	12-Φ30	32	3	412
300	711	485	430	390	16-Φ30	34	4	648
350	838	555	490	450	16-Φ33	38	4	524
400	864	620	550	505	16-Φ36	40	4	600
450	978	670	600	555	20-Φ36	42	4	670
500	1016	730	660	615	20-Φ36	44	4	750

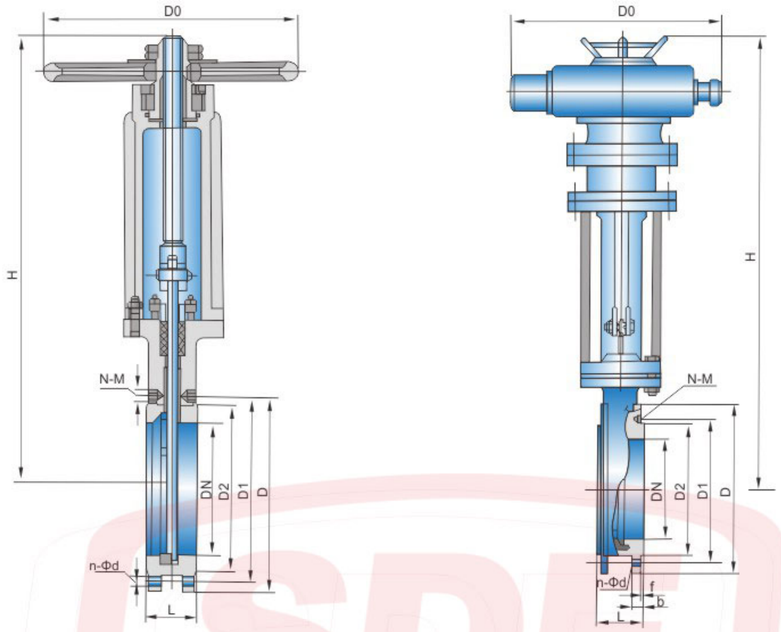

主要性能规范 Main Performance Specifications

型号 Model	公称压力PN(MPa)	试验压力 test pressure			适用介质 Applicable medium	工作温度(°C) working temp
		壳体 shell	密封(液) seal(hydraulic)	低压密封(气) Low pressure seal (gas)		
PZ973H-10 PZ973H-10C	1.0	1.5	1.1	0.6	渣水混合物、 空气灰混合物 Slag water mixture, air ash mixture	≤400°C
Z973H-16C	1.6	2.4	1.8			
Z973Y-10V	1.0	1.5	1.1		干灰、煤渣、钢渣 Dry ash, cinder, slag	540°C
Z973W-10NR	1.0	1.5	1.1			900°C

主要零件材料 Material Formain Parts

零件名称 Part name	阀体 Body	阀杆 Stem	阀板 Disc	支架 Yoke	阀杆螺母 Stem nut	密封面 Sealing surface
Z973Y-10V	ZG15CrMoV	25Cr2MoV	1Cr18Ni9Ti	WCB	ZQAL9-4	堆焊钴基硬质合金 Surfacing cobalt - based cemented carbide
Z973W-10NR	ZG20Cr25Ni20S12	321, 25Cr2MoV	ZG20Cr25Ni20S12	ZG15CrMoV	ZQAL9-4	本体 Ontology
Z973-16C	WCB	2Crl3	35#	WCB	ZQAL9-4	不锈钢 stainless steel

主要外形尺寸和连接尺寸 Main Dimensions and Connection Dimensions

DN (mm)	L	D1	D2	D	b	n-Φd	N-M	f	H	电动装置 Electric actuator	公称转矩(N•m) rated torque	电动机功率(kw) Motor Power
1.0MPa												
50	65	165	125	95	14	2-Φ18	2-M16	3	370	DZ10	100	0.25
65	65	185	145	118	15	2-Φ18	2-M16	3	460	DZ10	100	0.25
80	70	200	160	132	15	4-Φ18	4-M16	3	590	DZ10	100	0.25
100	70	220	180	156	16	4-Φ18	4-M16	3	780	DZ20	200	0.37
150	80	285	240	211	16	4-Φ22	4-M20	3	980	DZ20	200	0.37
200	80	340	295	266	18	4-Φ22	4-M20	3	1033	DZ30	300	0.55
250	86	395	350	320	18	6-Φ22	6-M20	3	1080	DZ30	300	0.55
300	92	445	400	370	18	8-Φ22	4-M20	3	1170	DZ30	300	0.55
350	100	505	460	428	18	10-Φ22	6-M20	3	1250	DZ30	300	0.55
400	110	565	515	480	20	8-Φ26	8-M24	4	1332	DZ45	450	1.5
450	120	615	565	530	22	10-Φ26	10-M24	4	1480	DZ60	600	2.2
500	130	670	620	565	24	10-Φ26	10-M24	4	1530	DZ120	1200	3

主要外形尺寸和连接尺寸 Main Dimensions and Connection Dimensions

DN (mm)	L	D1	D2	D	b	n-Φd	N-M	f	H	电动装置 Electric actuator	公称转矩(N•m) rated torque	电动机功率(kw) Motor Power
1.0MPa												
50	65	165	125	99	14	2-Φ18	2-M16	3	370	DZ10	100	0.25
65	65	185	145	118	15	2-Φ18	2-M16	3	460	DZ10	100	0.25
80	70	200	160	132	15	4-Φ18	4-M16	3	590	DZ10	100	0.25
100	70	220	180	156	15	4-Φ18	4-M16	3	780	DZ20	200	0.37
150	80	285	240	211	16	4-Φ22	4-M20	3	980	DZ20	200	0.37
200	80	340	295	266	16	8-Φ22	4-M20	3	1033	DZ30	300	0.55
250	94	405	355	319	18	8-Φ22	4-M20	3	1080	DZ30	300	0.55
300	98	460	410	370	18	6-Φ26	6-M24	4	1170	DZ30	300	0.55
350	100	520	470	429	18	8-Φ26	8-M24	4	1250	DZ45	450	1.5
400	110	580	525	485	20	10-Φ30	6-M27	4	1332	DZ45	450	1.5
450	120	640	585	548	22	10-Φ30	10-M27	4	1480	DZ60	600	2.2
500	130	715	650	609	24	10-Φ33	10-M30	4	1530	DZ120	1200	3

注：如有产品参数疑问请致电上海电站阀门有限公司详询，电话：021-59222288
Note: If the product parameters, please call our company detailed inquiry, Tel: 021-59222288

New Generation of Butt Welding Type Gate Valve
换代型对焊式闸阀

SGZ61H-16, 25, 40, 64, 100P, R, C, I, V

说明 Description

SGZ61H系列闸阀为我厂在广泛调研基础上，应广大用户要求自主开发而成的具有独立知识产权产品。可广泛替代原Z41H系列闸阀。具有启闭迅捷、密封可靠、寿命长、重量轻、铸件工艺性好以及安装不需法兰、管件、垫片，并减少两个泄漏点等一系列优点，可最大限度地满足各类用户的节能降耗、降本增盈及环保要求。

SGJ61H series gate valves are independently developed products with own intellectual property by the request of numerous users on the basis of extensive invesrigation and research conducted by our factory. They can be substitutes for original J41H series gate valves. A series of excellent features include quick startup-shutoff, reliable seal, long service lifetime, light weight, good processing property of cast parts, installation without the need of flange, pipe fittings, gaskets as well as reduction of two leakage points. The requests of energy-saving, consumption reduction, cost reduction, profits increase and environment protection by all types of users can be satisfied to the utmost extent.

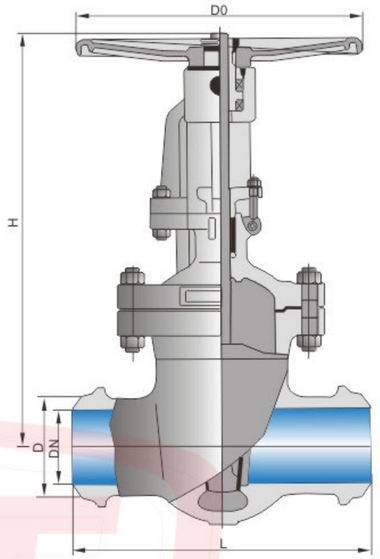

试验压力 Test Pressure

压力(MPa) Pressure	试验压力(MPa) Test pressure	
	强度 Strength	密封 Sealing
1.6	2.4	1.76
2.5	3.8	2.75
4.0	6	4.4
6.4	9.6	7.4
10	15	11

壳体材料 Shell Material

代号 Code	C	P		R		V(I)	
材料 material	25或WCB 25 or WCB	CF8 304	CF3 304L	CF8M 316	CF3M 316L	WC6	WC9
工作温度(°C) working temp	425°C	200°C		200°C		552°C	593°C
适用介质 Applicable media	水、汽、油品等 Water, steam, oil.	硝酸等腐蚀性介质 HNO3 and other corrosive media	强氧化性介质 Strong oxidizing medium	醋酸等 acetic acid	尿素等 Urea	水、汽、油品等 Water, steam, oil.	

主要外形尺寸和连接尺寸 Main Dimensions and Connection Dimensions

DN	D	L	H	D0
1.6MPa, 2.5MPa				
50	76	250	355	240
65	89	265	378	240
80	110	280	430	280
100	129	300	500	320
125	153	325	580	360
150	189	350	650	360
200	245	400	736	400
250	285	450	818	400
300	350	500	1080	450
350	410	550	1197	500
400	460	600	1332	600
500	570	700	1500	

DN	D	L	H	D0
4.0MPa				
50	79	250	370	280
65	90	280	398	280
80	110	310	456	320
100	135	350	552	360
125	164	400	628	400
150	190	450	709	400
200	248	550	838	400
250	290	650	957	450
300	350	750	1118	500
350	410	850	1567	500
400	460	950	1778	500
500	570	1150	2050	500

DN	D	L	H	D0
6.4MPa, 10.0MPa				
50	79	250	371	280
65	90	280	293	280
80	110	310	456	320
100	138	350	552	360
125	168	400	628	400
150	195	450	709	400
200	260	550	858	450
250	313	650	1015	560
300	364	750	1330	600
350	422	850	1589	600
400	474	950	1778	600
500	576	1150	2050	600

Ultra High Temperature Wedge Gate Valve
超高温楔式闸阀

Z41Y-16PI, 25PI, 40PI Z41Y-16PII, 25PII, 40PII Z40Y-16PI, 25PI, 40PI Z40Y-16PII, 25PII, 40PII

主要特点

1. 阀体、阀盖材质为耐热不锈钢材料。
2. 具有耐高温、耐腐蚀的优点，适用于水、蒸汽、烟气、油品或含雾状、粉末状、颗粒状等介质的管路上。

Main Feature

1. Body, bonnet material for the heat-resistant stainless steel.
2. With high temperature, corrosion-resistant advantages for water, steam, flue gas, oil or mist, powder, granular and other media on the pipeline.

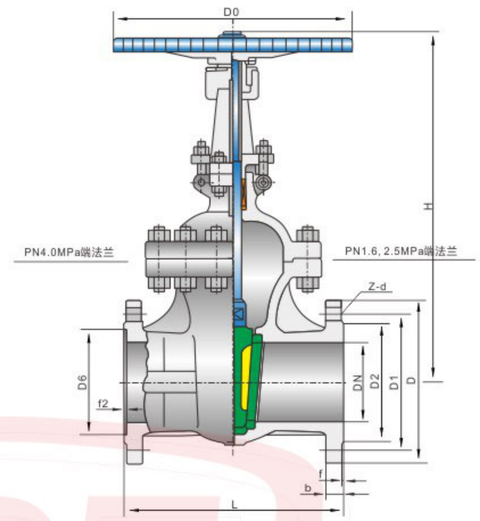

主要性能规范 Main Performance Specifications

1. 试验压力 Test Pressure

试验压力(MPa) test pressure	公称压力PN(MPa)		
	1.6	2.5	4.0
强度试验 Strength test	2.4	3.8	6.0
上密封试验 Back seal test	1.8	2.8	4.4
密封试验 Seal test	1.8	2.8	4.4
气密封试验 Gas seal test	0.5~0.7		

2. 阀体材料及适用范围 Body Material and Its Scope

产品类型 product type	阀体材料 Body material	适用介质 Applicable media	适用温度(°C) Applicable Temp
PI	铬镍钛钢 Cr-Ni-Ti steel	水、蒸汽、烟气、油品或含雾状、粉末状、颗粒状等的介质 Water, steam, flue gas, oil or medium containing mist, powder, granules and the like	≤650
PII	高镍铬钢 high Cr-Mo steel		≤900

注：如有产品参数疑问请致电上海电站阀门有限公司详询，电话：021-59222288

Note: If the product parameters, please call our company detailed inquiry, Tel: 021-59222288

Ultra High Temperature Wedge Gate Valve
超高温楔式闸阀

Z1, Z2 Forming Series Gate Valves with Ablution Holes
Z1仿、Z2仿系列带吹扫孔闸阀

Z41Y-16PI, 25PI, 40PI Z41Y-16PII, 25PII, 40PII Z40Y-16PI, 25PI, 40PI Z40Y-16PII, 25PII, 40PII

主要外形尺寸和连接尺寸　Main Dimensions and Connection Dimensions

公称通径 DN(mm)	主要外形尺寸及连接尺寸(mm) Main dimensions and connection dimensions											重量 WT(kg)
	L	H	D	D1	D2	b	f	D6	f2	z-d	D0	
	Z41Y-16PI Z40Y-16PI Z41Y-16PII Z40Y-16PII											
50	250	362	160	125	100	16	3			4-18	250	29
65	270	395	180	145	120	18	3			4-18	250	33
80	280	426	195	160	135	20	3			8-18	300	46
100	300	470	215	180	155	20	3			8-18	300	63
125	325	520	245	210	185	22	3			8-18	350	98
150	350	590	280	240	210	24	3			8-23	350	125
200	400	725	335	295	265	26	3			12-23	400	185
250	450	865	405	355	320	30	3			12-25	450	260
300	500	1000	460	410	375	30	3			12-25	550	365
350	550	1140	520	470	435	34	4			16-25	600	498
400	600	1285	580	525	485	36	4			16-30	650	685
	Z41Y-25PI Z40Y-25PI Z41Y-25PII Z40Y-25PII											
50	250	362	160	125	100	20	3			4-18	250	31
65	270	395	180	145	120	22	3			8-18	250	35
80	280	426	195	160	135	22	3			8-18	300	47
100	300	470	230	190	160	24	3			8-23	300	65
125	325	520	270	220	188	28	3			8-25	350	100
150	350	590	300	250	218	30	3			8-25	350	130
200	400	725	360	310	278	34	3			12-25	400	195
250	450	865	425	370	332	36	3			12-30	450	275
300	500	1000	485	430	390	40	4			16-30	550	392
350	550	1140	550	490	448	44	4			16-34	650	535
400	600	1285	610	550	505	48	4			16-34	700	742
	Z41Y-40PI Z40Y-40PI Z41Y-40PII Z40Y-40PII											
50	250	362	160	125	100	20	3	88	4	4-18	300	31
65	280	395	180	145	120	22	3	110	4	8-18	300	38
80	310	426	195	160	135	22	3	121	4	8-18	350	51
100	350	470	230	190	160	24	3	150	4	8-23	350	80
125	400	520	270	220	188	28	3	176	4.5	8-25	400	120
150	450	590	300	250	218	30	3	204	4.5	8-25	400	148
200	550	725	375	320	282	38	3	260	4.5	12-30	450	252
250	650	865	445	385	345	42	3	313	4.5	12-34	550	355
300	750	1000	510	450	408	46	4	364	4.5	16-34	650	540
350	850	1440	570	510	465	52	4	422	5	16-34	750	690
400	950	1285	655	585	535	58	4	474	5	16-41	850	960

注：其他规格、压力、结构形式、驱动力式，可在合同中注明

Note: other specifications, pressure, structure, driving force, can be specified in the contract

主要特点及用途

1. 本系列闸阀主体为楔式单闸板双向密封，结构简单、紧凑、密封可靠。
2. 吹扫装置可对易结焦、颗粒状介质的管路、阀门等进行清洗、冲刷，有效地提高系统的使用寿命。
3. Z1仿、Z2仿系列带吹扫孔闸阀适用于水、蒸汽、烟气、油品或雾状、粉末状、颗粒状等介质的管路上，作为启闭装置用，尤其适用于石化行业输油和催化裂变系统，起启闭、清洗冲刷管道的作用。

Chief Features and Usages

1. The main body of this series gate valves is of a wedge single-gate dual-direction sealing, simple and compact structure and reliable sealing.
2. The ablution device can be used to clean and wash waway teh pipelines and valves which are easy charred or contain grain-shaped medium to effectively raise the duration of the system.
3. Suitable to act as the open & close device for the pipelines of vater, steam, smoking, oil-goods or the medium in fog, powder or grain-state, especially for the system of oil transportation and catalyzing and cracking in petrochemical trades to open and clean and wash away the pipelines.

主要性能规范　Main Performance Specifications

1. 试验压力　Test Pressure

试验压力(MPa)	公称压力(MPa) Nominal pressure				
	1.6	2.5	4.0	6.4	10.0
强度试验 Strength test	2.4	3.8	6.0	9.6	15
上密封试验 Seal test	1.8	2.8	4.4	7	11
密封试验 Seal test	1.8	2.8	4.4	7	11

2. 阀体材料及适用范围　Body Material and Its Scope

产品类型 Product type	阀体材料 Body material	适用介质 Applicable media	适用温度(°C) Applicable Temp
Z1/Z2仿41H-C	WCB	水、蒸汽、烟气、油品或含雾状、粉末状、颗粒状等的介质 Water, steam, flue gas, oil or medium containing mist, powder, granules and the like	≤425
Z1/Z2仿41Y-I	铬钼钢 Cr-Mo steel		≤550
Z1/Z2仿41Y-PI	铬镍钛钢 Cr-Ni-Ti steel		≤650
Z1/Z2仿41Y-PII	高镍铬钢 high Cr-Mo steel		≤900

注：如有产品参数疑问请致电上海电站阀门有限公司详询，电话：021-59222288

Note: If the product parameters, please call our company detailed inquiry, Tel: 021-59222288

PN1.6, 2.5, 4.0, 6.4, 10.0

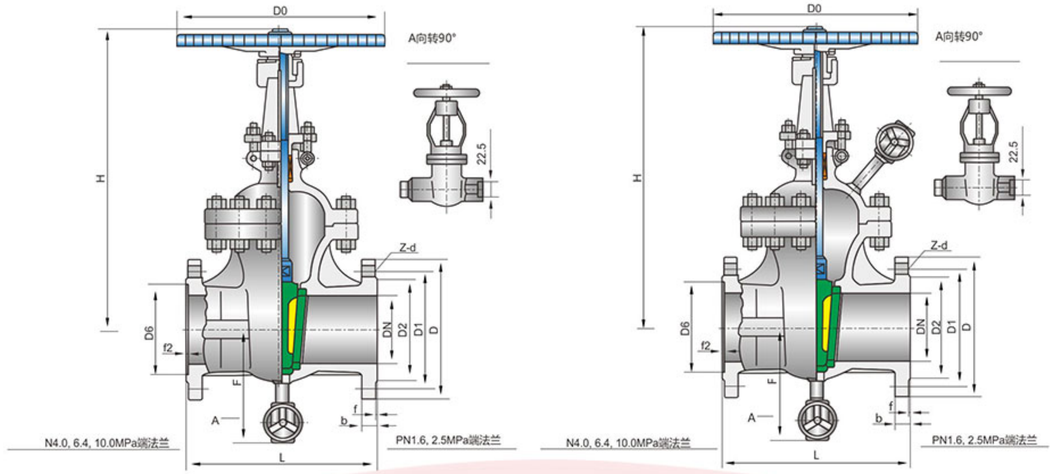

主要外形尺寸和连接尺寸 Main Dimensions and Connection Dimensions

公称通径 DN(mm)	主要外形尺寸及连接尺寸(mm) Main dimensions and connection dimensions												Z1仿 重量(kg)	Z2仿 重量(kg)
	L	H	D	D1	D2	b	f	D6	f2	F	z-d	D0		
Z1/Z2仿41H-16C Z1/Z2仿41Y-16I Z1/Z2仿41Y-16PI Z1/Z2仿41Y-16PII														
50	250	362	160	125	100	16	3			195	4-18	250	29	32
65	270	395	180	145	120	18	3			202	4-18	250	33	36
80	280	426	195	160	135	20	3			210	8-18	300	46	49
100	300	470	215	180	155	20	3			225	8-18	300	63	66
125	325	520	245	210	185	22	3			242	8-18	350	98	102
150	350	590	280	240	210	24	3			260	8-23	350	125	128
200	400	725	335	295	265	26	3			283	12-23	400	185	188
250	450	865	405	355	320	30	3			310	12-25	450	260	263
300	500	1000	460	410	375	30	3			340	12-25	550	365	368
350	550	1140	520	470	435	34	4			372	16-25	600	498	502
400	600	1285	580	525	485	36	4			405	16-30	650	685	688
Z1/Z2仿41H-25 Z1/Z2仿41Y-25I Z1/Z2仿41Y-25PI Z1/Z2仿41Y-25PII														
50	250	362	160	125	100	20	3			195	4-18	250	31	34
65	270	395	180	145	120	22	3			202	8-18	250	35	38
80	280	426	195	160	135	22	3			210	8-18	300	47	50
100	300	470	230	190	160	24	3			225	8-23	300	65	68
125	325	520	270	220	188	28	3			242	8-25	350	100	103
150	350	590	300	250	218	30	3			260	8-25	350	130	133
200	400	725	360	310	278	34	3			283	12-25	400	195	198
250	450	865	425	370	332	36	3			310	12-30	450	275	278
300	500	1000	485	430	390	40	4			340	16-30	550	392	395
350	550	1140	550	490	448	44	4			372	16-34	650	535	538
400	600	1285	610	550	505	48	4			405	16-34	700	742	745

Z1, Z2 Forming Series Gate Valves with Ablution Holes
Z1仿、Z2仿系列带吹扫孔闸阀

PN1.6, 2.5, 4.0, 6.4, 10.0

主要外形尺寸和连接尺寸 Main Dimensions and Connection Dimensions

公称通径 DN(mm)	主要外形尺寸及连接尺寸(mm) Main dimensions and connection dimensions												Z1仿 重量 WT(kg)	Z2仿 重量 WT(kg)
	L	H	D	D1	D2	b	f	D6	f2	F	z-d	D0		
Z1/Z2仿41H-40 Z1/Z2仿41Y-40I Z1/Z2仿41Y-40PI Z1/Z2仿41Y-40PII														
50	250	362	160	125	100	20	3	88	4	195	4-18	300	33	37
65	280	395	180	145	120	22	3	110	4	202	8-18	300	38	42
80	310	426	195	160	135	22	3	121	4	210	8-18	350	51	55
100	350	470	230	190	160	24	3	150	4.5	225	8-23	350	80	84
125	400	520	270	220	188	28	3	176	4.5	242	8-25	400	120	124
150	450	590	300	250	218	30	3	204	4.5	260	8-25	400	148	152
200	550	725	375	320	282	38	3	260	4.5	283	12-30	450	252	256
250	650	865	445	385	345	42	3	313	4.5	310	12-34	550	355	359
300	750	1000	510	450	408	46	3	364	4.5	340	16-34	650	540	544
350	850	1140	570	510	465	52	4	422	5	372	16-34	750	690	694
400	950	1285	655	585	535	58	4	474	5	405	16-41	850	960	964
Z1/Z2仿41H-64 Z1/Z2仿41Y-64I Z1/Z2仿41Y-64PI Z1/Z2仿41Y-64PII														
50	250	370	175	135	105	26	3	88	4	200	4-23	300	36	39
65	280	405	200	160	130	28	3	110	4	210	8-23	300	45	49
80	310	435	210	170	140	30	3	121	4	215	8-23	350	59	63
100	350	480	250	200	168	32	3	150	4.5	232	8-25	400	90	94
125	400	530	295	240	202	36	3	176	4.5	250	8-30	400	135	139
150	450	605	340	280	240	38	3	204	4.5	268	8-34	450	168	172
200	550	740	405	345	300	44	3	260	4.5	290	12-34	550	280	284
250	650	880	470	400	352	48	3	313	4.5	318	12-41	650	392	396
300	750	1015	530	460	412	54	4	364	4.5	350	16-41	750	585	589
350	850	1160	595	525	475	60	4	422	5	382	16-41	800	740	744
400	950	1310	670	585	525	66	4	474	5	415	16-48	900	190	1014
Z1/Z2仿41H-100 Z1/Z2仿41Y-100I Z1/Z2仿41Y-100PI Z1/Z2仿41Y-100PII														
50	250	370	195	145	112	28	3	88	4	202	4-25	300	38	43
65	280	405	220	170	138	32	3	110	4	215	8-25	300	53	58
80	310	435	230	180	148	34	3	121	4	220	8-25	350	68	73
100	350	480	265	210	172	38	3	150	4.5	240	8-30	400	102	107
125	400	530	310	250	210	42	3	176	4.5	257	8-34	400	150	155
150	450	605	350	290	250	46	3	204	4.5	275	12-34	450	187	192
200	550	740	430	360	312	54	3	260	4.5	298	12-41	550	305	310
250	650	880	500	430	382	60	3	313	4.5	325	12-41	650	425	430
300	750	1015	585	500	442	70	4	364	4.5	360	16-48	750	625	630
350	850	1160	655	560	498	76	4	422	5	395	16-54	850	785	790
400	950	1310	715	620	558	80	4	474	5	428	16-54	950	1055	1060

Z40(Y, H)-16, 25, 40, 64, 100, 160 KZ40(Y, H)-16, 25, 40, 64, 100, 160(K为抗硫系列)
Z41(Y, H)-16, 25, 40, 64, 100, 160 KZ41(Y, H)-16, 25, 40, 64, 100, 160(K为抗硫系列)

试验压力 Test Pressure

公称压力 PN	试验压力(mpa) Test Pressure			
	壳体 Shell	密封(液) Seal(hydraulic)	密封(气) Seal(Pneumatic)	上密封 Back seat
1.6	2.4	1.8	0.6	1.8
2.5	3.8	2.8		2.8
4.0	6.0	4.4		4.4
6.4	9.6	7.0		7.0
10.0	15.0	11.0		11.0
16	24.0	18.0		18.0

适用范围 Scope of Application

壳体材料 Shell material	适用介质 Applicable media	适用温度(°C) Applicable Temp
碳素钢(C型) Carbon steel(C)	水、蒸汽、油品 Water, steam, oil	≤425
铬镍钛钢(P型) Cr.Ni.Ti steel(P)	硝酸类 HNO3	≤200
铬镍钼钛钢(R型) Cr.Ni.Mo.Ti steel(R)	醋酸类 acetic acid	≤200
铬钼钢(I型) Cr.Mo. steel(I)	水、蒸汽、油品 Water, steam, oil	≤550

结构特点与用途:

1. 结构紧凑、设计合理，阀门刚性好，通道流畅，流阻系数小。
2. 密封面采用不锈钢和硬质合金，使用寿命长。
3. 采用柔性石墨填料、密封可靠、操作轻便灵活。
4. 驱动方式分手动、电动、气动、齿轮传动，结构型式：弹性楔式单阀板、刚性楔式单闸阀板和双闸板型式。
5. 广泛适用于石油化工、火力发电厂等油品、水蒸汽管路上作接通或截断管路中介质的启闭装置。

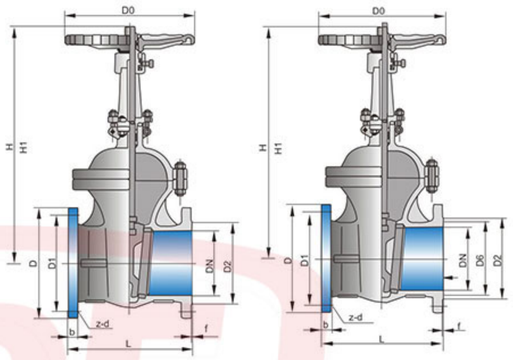

Z40 PN≤2.5MPa

Z40 PN≥4.0MPa

主要零件材料 Material Formain Parts

阀体、阀盖 Body, Bonnet	闸板、阀座 Disc, Seat	阀杆 Stem	阀杆螺母 Stem Nut	填料 Packing	手轮 Handle
碳素钢 Carbon steel	优质碳钢+硬质合金或不锈钢 Carbon steel + carbide alloy or SS.	铬不锈钢 Cr. stainless steel	铝青铜 Aluminum bronze	石墨石棉盘根 Graphite asbestos packing	可锻铸铁 Malleable Iron
铬镍钛钢 Cr.Ni.Ti steel	不锈钢、不锈钢+硬质合金 SS, SS+carbide alloy	铬镍钛不锈钢 Cr.Ni.Ti stainless steel		浸聚四氟乙烯 Dip tetrafluoroethylene	
铬镍钼钛钢 Cr.Ni.Mo.Ti steel	不锈钢、不锈钢+硬质合金 SS, SS+carbide alloy	铬镍钛不锈钢 Cr.Ni.Ti stainless steel		石棉盘根 Asbestos packing	球墨铸铁 Ductile Iron
铬钼钢 Cr.Mo. steel	合金钢+硬质合金 alloy steel+Carbide	铬钼铝钢 318(抗硫系列) Cr.Mo.Al steel 318(Anti-sulfur)		柔性石墨填充四氟(抗硫系列) FG filled with tetrafluoro (anti-sulfur)	

主要零件材料 Material Formain Parts

DN	L	D	D1	D2	b	f	Z-d	H	H1	D0	重量WT(kg)
	Z41(H, Y)-16	Z40Y-16(P, R)	Z40W-16P	Z40Y-16I	Z41(H, Y)16	Z41Y-16P	Z41-16R	Z40W-16P	Z41W-16R	Z41Y-16I	
15	130	95	65	45	14	2	4-14	220	240	120	5
20	150	105	75	55	14	2	4-14	255	284	140	6.5
25	160	115	85	65	14	2	4-14	275	303	160	9
32	180	135	100	78	16	2	4-18	280	321	180	12
40	200	145	110	85	16	3	4-18	300	352	200	26.5
50	250	160	125	100	16	3	4-18	358	438	240	29
65	265	180	145	120	18	3	4-18	375	450	240	33
80	280	195	160	135	20	3	8-18	433	528	280	45
100	300	215	180	155	20	3	8-18	502	620	320	63
125	325	245	210	185	22	3	8-18	612	753	360	108
150	350	280	240	210	22	3	8-23	676	847	360	134
200	400	335	295	265	24	3	12-23	820	1039	400	192
250	450	405	355	320	26	3	12-25	969	1245	450	273
300	500	460	410	375	38	3	12-25	1142	1472	560	379
350	550	520	470	435	32	4	16-25	1280	1450	640	590
400	600	580	525	485	36	4	16-30	1452	1887	640	850
450	650	640	585	545	38	4	20-30	1541	2011	720	907
500	700	705	650	608	42	4	20-34	1676	2181	720	958
600	800	840	770	718	46	5	20-41	1874	2346	800	1112

Wedge Type Gate Valves
楔式闸阀

主要外形尺寸和连接尺寸 Main Dimensions and Connection Dimensions

公称通径DN	L	D	D1	D2	b	f	Z-d	H	H1	D0	重量WT(kg)
	Z40(H, Y)-25	Z40Y-25(P, R)	Z40W-25(P, R)	Z40Y-25I	Z41(H, Y)-25	Z41Y-25(P, R)	Z41W-25(P, R)	Z41Y-25I			
15	130	95	65	45	16	2	4-14	220	240	120	5.5
20	150	105	75	55	16	2	4-14	255	284	140	7
25	160	115	85	65	18	2	4-14	275	303	160	11
32	180	135	100	78	18	2	4-18	280	321	180	14
40	200	145	110	85	20	3	4-18	300	352	200	30
50	250	160	125	100	22	3	4-18	358	438	240	34
65	265	180	145	120	22	3	8-18	375	450	240	36
80	280	195	160	135	24	3	8-18	433	528	280	50
100	300	230	190	160	28	3	8-23	502	620	320	69
125	325	270	220	188	30	3	8-25	612	753	360	116
150	350	300	250	218	34	3	8-25	676	847	360	141
200	400	360	310	278	36	3	12-25	820	1039	400	192
250	450	425	370	332	40	3	12-30	969	1245	450	207
300	500	485	430	390	44	4	16-30	1142	1472	560	400
350	550	550	490	448	48	4	16-34	1280	1450	640	631
400	600	610	550	505	50	4	16-34	1452	1887	640	900
450	650	660	600	555	52	4	20-34	1541	2011	720	1013
500	700	730	660	610	56	4	20-41	1676	2181	720	1166
600	800	840	770	718		5	20-41	1874	2346	800	1258

主要外形尺寸和连接尺寸 Main Dimensions and Connection Dimensions

公称通径DN	L	D	D1	D2	D6	b	f	f2	Z-d	H	H1	D0	重量WT(kg)
	Z40(H, Y)-40	Z40Y-40(P, R)	Z40W-40(P, R)	Z40Y-40I	Z41(H, Y)-40	Z41Y-40(P, R)	Z41W-40(P, R)	Z41Y-40I					
20	150	105	75	55	51	16	2	4	4-14	256	285	140	8
25	160	115	85	65	58	16	2	4	4-14	275	305	160	9.3
32	180	135	100	78	66	18	2	4	4-18	287	322	180	12
40	200	145	110	85	76	18	3	4	4-18	323	369	200	16.5
50	250	160	125	100	88	20	3	4	4-18	372	440	280	29
65	280	180	145	120	110	22	3	4	8-18	395	473	280	39
80	310	195	160	135	121	22	3	4	8-18	457	552	320	52
100	350	230	190	160	150	24	3	4.5	8-23	552	671	360	80
125	400	270	220	188	176	28	3	4.5	8-25	634	726	400	127
150	450	300	250	218	204	30	3	4.5	8-25	708	883	400	154
200	550	375	320	282	260	38	3	4.5	12-30	858	1086	450	263
250	650	445	385	345	313	42	3	4.5	12-34	1015	1298	560	368
300	750	510	450	408	364	46	4	4.5	16-34	1203	1535	640	547
350	850	570	510	465	422	52	4	5	16-34	1341	1678	640	679
400	950	655	585	535	474	58	4	5	16-41	1492	1903	720	953

注:阀门驱动方式有电动、气动、齿轮传动等多种方式。
Note: Valve drive with electric, pneumatic, gear and other means.

Wedge Type Gate Valve (Electric Drive)
楔式闸阀(电动)

Z40(Y, H)-16, 25, 40, 64, 100, 160 KZ40(Y, H)-16, 25, 40, 64, 100, 160(K为抗硫系列)
Z41(Y, H)-16, 25, 40, 64, 100, 160 KZ41(Y, H)-16, 25, 40, 64, 100, 160(K为抗硫系列)

主要外形尺寸和连接尺寸 Main Dimensions and Connection Dimensions

公称通径DN	L	D	D1	D2	D6	b	f	f2	Z-d	H	H1	D0	重量WT(kg)
				Z41Y-64P	Z41Y-64R	Z41W-64P	Z41W-64R	Z41Y-64I					
20	190	125	90	68	51	20	2	4	4-18	258	288	180	9
25	210	135	100	78	58	22	2	4	4-18	310	341	200	10
32	230	150	110	82	66	24	2	4	4-23	320	353	200	14
40	240	165	125	95	76	24	3	4	4-23	360	389	240	30
50	250	175	135	105	88	26	3	4	4-23	372	448	280	39
65	280	200	160	130	110	28	3	4	8-23	395	475	280	43
80	310	210	170	140	121	30	3	4	8-23	458	553	320	60
100	350	250	200	168	150	32	3	4.5	8-25	553	679	360	89
125	400	295	240	202	176	36	3	4.5	8-30	638	779	400	140
150	450	340	280	240	204	38	3	4.5	8-34	718	893	450	207
200	550	405	345	300	260	44	3	4.5	12-34	873	1100	560	325
250	650	470	400	352	313	48	3	4.5	12-41	1053	1332	640	467
300	750	530	460	412	364	54	4	4.5	16-41	1203	1535	640	590
	Z40(H, Y)-100	Z40Y-100(P, R)		Z40W-100(P, R)		Z40Y-100I	Z41(H, Y)-100		Z41Y-100(P, R)	Z41W-100(P, R)		Z41Y-100I	
25	210	135	100	78	58	24	2	4	4-18	310	341	200	13
32	230	150	110	82	66	24	2	4	4-18	320	353	240	20
40	240	165	125	95	76	26	3	4	4-23	360	389	280	50
50	250	195	145	112	88	28	3	4	4-23	490	558	360	60
65	280	220	170	138	110	32	3	4	8-25	540	622	400	70
80	310	230	180	148	121	34	3	4	8-25	573	671	400	100
100	350	265	210	172	150	38	3	4.5	8-30	575	671	400	110
125	400	310	250	210	176	42	3	4.5	8-34	744	892	560	180
150	450	350	290	250	204	46	3	4.5	12-34	800	972	560	250
200	550	430	360	312	260	54	3	4.5	12-41	800	972	560	360
250	650	500	430	382	313	60	3	4.5	12-41	1050	1305	640	485
300	750	585	500	442	364	70	4	4.5	16-48	1208	1506	640	633
	Z40(H, Y)-160	Z40Y-160(P, R)		Z40W-160(P, R)		Z40Y-160I	Z41(H, Y)-160		Z41Y-160(P, R)	Z41W-160(P, R)		Z41Y-160I	
15	170	110	75	55	40	24	2	4	4-18	230	250	200	7
20	190	130	90	62	51	26	2	4	4-23	260	288	200	10
25	210	140	100	72	58	28	2	4	4-23	280	310	280	14
32	230	165	115	85	66	30	2	4	4-25	312	350	320	21
40	240	175	125	92	76	32	3	4	4-27	350	395	320	26
50	300	215	165	132	88	36	3	4	8-25	512	612	360	73
65	340	245	190	152	110	44	3	4	8-30	560	677	360	110
80	390	260	205	168	121	46	3	4	8-30	585	686	400	141
100	450	300	240	200	150	48	3	4.5	8-34	631	751	450	185
125	525	355	285	238	176	60	3	4.5	8-41	723	868	560	320
150	600	390	318	270	204	66	3	4.5	12-41	820	997	640	462
200	750	480	400	345	260	78	3	4.5	12-48	990	1224	720	711

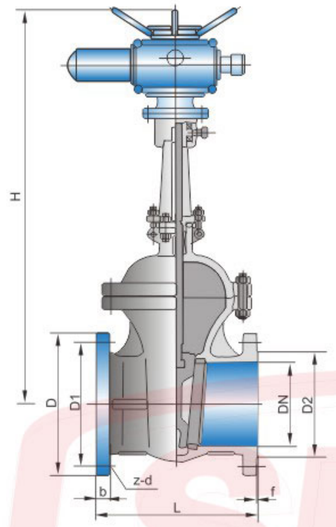

Z40 PN≤2.5MPa

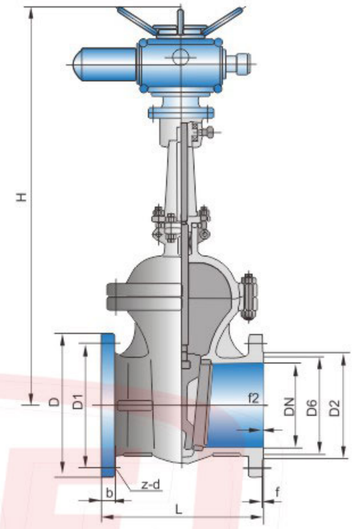

Z40 PN≥4.0MPa

主要外形尺寸和连接尺寸 Main Dimensions and Connection Dimensions

公称通径 DN	L	D	D1	D2	b	f	Z-d	H	电动装置	重量(kg)
	Z940(H, Y)-16C	Z940Y-16(P, R)	Z940W-16(P, R)	Z940Y-16I	Z941(H, Y)-16C	Z941Y-16(P, R)	Z941W-16(P, R)	Z940Y-16I		
40	200	145	110	85	16	3	4-18	595	DZW15	56
50	250	160	125	100	16	3	4-18	653	DZW20	59
65	265	180	145	120	18	3	4-18	665	DZW20	62
80	280	195	160	135	20	3	8-18	725	DZW20	74
100	300	215	180	155	20	3	8-18	787	DZW20	92
150	350	280	240	210	24	3	8-23	955	DZW30	161
200	400	335	295	265	26	3	12-23	1105	DZW30	219
250	450	405	355	320	30	3	12-25	1343	DZW45	376
300	500	460	410	375	30	4	12-25	1516	DZW60	484
350	550	520	470	435	34	4	16-25	1678	DZW60	695
400	600	580	525	485	36	4	16-30	1849	DZW90	977
450	650	640	585	545	40	4	20-30	1937	DZW90	1033
500	700	705	650	608	44	4	20-34	2234	DZW120	1087
600	800	840	770	718	48	5	20-41	2432	DZW180	1357
700	900	910	840	788	50	5	24-41	2489	DZW250	1481
800	1000	1020	950	898	52	5	24-41	2643	DZW350	1845

注:DN700,DN800可选择Z942型 Note: DN700, DN800 can choose Z942 type

Wedge Type Gate Valve (Electric Drive)
楔式闸阀(电动)

主要外形尺寸和连接尺寸 Main Dimensions and Connection Dimensions

公称通径 DN	L	D	D1	D2	b	f	Z-d	H	电动装置	重量(kg)
	Z940(H, Y)-25C	Z940Y-25(P, R)	Z940W-25(P, R)	Z940Y-25I	Z941(H, Y)-25C	Z941Y-25(P, R)	Z941W-25(P, R)	Z940Y-25I		
40	200	145	110	85	18	3	4-18	595	DZW15	60
50	250	160	125	100	20	3	4-18	653	DZW20	64
65	265	180	145	120	22	3	8-18	665	DZW20	65
80	280	195	160	135	22	3	8-18	725	DZW20	79
100	300	230	190	160	24	3	8-23	787	DZW20	98
125	325	270	220	188	28	3	8-25	902	DZW30	154
150	350	300	250	218	30	3	8-25	955	DZW30	168
200	400	360	310	278	34	3	12-25	1105	DZW45	219
250	425	425	370	332	36	3	12-30	1343	DZW45	390
300	450	485	430	390	40	4	16-30	1516	DZW60	505
350	550	550	490	448	44	4	16-34	1678	DZW60	736
400	600	610	550	505	48	4	16—34	1849	DZW90	1027
450	650	660	600	555	50	4	20-34	1937	DZW90	1139
500	700	730	660	610	52	4	20-41	2243	DZW120	1228
600	800	840	770	718	56	5	20-41	2432	DZW180	1502
700	900	955	875	815	60	5	24-48	2489	DZW250	1617
800	1000	1070	990	930	64	5	24-48	2643	DZW350	1923

注:DN700,DN800可选择Z942型 Note: DN700, DN800 can choose Z942 type

主要外形尺寸和连接尺寸 Main Dimensions and Connection Dimensions

公称通径 DN	L	D	D1	D2	D6	b	z-d	f	f2	H	电动装置	重量(kg)
	Z940(H, Y)-40	Z940Y-40(P, R)	Z940W-40(P, R)	Z940Y-40I	Z941(H, Y)-40	Z941Y-40(P, R)	Z941W-40(P, R)	Z940Y-40I				
40	200	145	110	85	76	18	4-18	3	4	617	DZW15	46
50	250	160	125	100	88	20	4-18	3	4	665	DZW20	58
65	280	180	145	120	110	22	8-18	3	4	680	DZW20	68
80	310	195	160	135	121	22	8-18	3	4	752	DZW20	80
100	350	230	190	160	150	24	8-23	3	4.5	846	DZW30	108
150	450	300	250	218	204	30	8-25	3	4.5	1087	DZW45	258
200	550	375	320	282	260	38	12-30	3	4.5	1243	DZW45	366
250	650	445	385	345	313	42	12-34	3	4.5	1429	DZW60	472
300	750	510	450	408	364	46	16-34	4	4.5	1608	DZW90	673
350	850	570	510	465	422	52	16-34	4	5	1738	DZW90	804
400	950	655	585	535	474	58	16-41	4	5	1897	DZW120	1081
450	1050	680	610	560	524	60	20-41	4	5	2104	DZW180	1259
500	1150	755	670	612	576	62	20-48	4	5	2401	DZW180	1348

主要外形尺寸和连接尺寸 Main Dimensions and Connection Dimensions

公称通径DN	L	D	D1	D2	D6	b	z-d	f	f2	H	电动装置 Electric Actuator	重量WT(kg)
	Z940(H, Y)-64	Z940Y-64(P, R)	Z940W-64(P, R)	Z940Y-64I	Z941(H, Y)-64	Z941Y-64(P, R)	Z941W-64(P, R)	Z940Y-64I				
50	250	175	135	105	88	26	4-23	3	4	667	DZW20	68
65	280	200	160	130	110	28	8-23	3	4	685	DZW20	72
80	310	210	170	140	121	30	8-23	3	4	748	DZW30	88
100	350	250	200	168	150	32	8-25	3	4.5	845	DZW30	117
150	450	340	280	240	204	38	8-34	3	4.5	1009	DZW45	314
200	550	405	345	300	260	44	12-34	3	4.5	1253	DZW60	432
250	650	470	400	352	313	48	12-41	3	4.5	1449	DZW60	595
300	750	530	460	412	364	54	16-41	4	4.5	1867	DZW90	721
350	850	595	525	475	422	60	16-41	4	5	1931	DZW120	863
400	950	670	585	525	474	66	16-48	4	5	2017	DZW180	1129
500	1150	800	705	640	576	70	20-54	4	5	2456	DZW250	1493
600	1450	930	820	750	678	76	20-58	5	6	2990	DZW300	1789
	Z940(H, Y)-100	Z940Y-100(P, R)	Z940W-100(P, R)	Z940Y-100I	Z941(H, Y)-100	Z941Y-100(P, R)	Z941W-100(P, R)	Z940Y-100I				
50	250	195	145	112	88	28	4-25	3	4	781	DZW20	78
65	280	220	170	138	110	32	8-25	3	4	830	DZW20	96
80	310	230	180	148	121	34	8-25	3	4	865	DZW30	126
100	350	265	210	172	150	38	8-30	3	4.5	1179	DZW30	134
150	450	350	290	250	204	46	12-34	3	4.5	1201	DZW60	352
200	550	430	360	312	260	54	12-41	3	4.5	1611	DZW90	484
250	650	500	430	382	313	60	12-41	3	4.5	1903	DZW90	608
300	750	585	500	442	364	70	16-48	4	4.5	2054	DZW120	757
350	850	655	560	498	422	76	16-54	4	5	2132	DZW180	994
400	950	715	620	558	474	80	16-54	4	5	2321	DZW250	1269
	Z940(H, Y)-160	Z940Y-160(P, R)	Z940W-160(P, R)	Z940Y-160I	Z941(H, Y)-160	Z941Y-160(P, R)	Z941W-160(P, R)	Z940Y-160I				
50	300	215	165	132	88	36	8-25	3	4	905	DZW20	101
65	340	245	190	152	110	44	8-30	3	4	968	DZW20	137
80	390	260	205	168	121	46	8-30	3	4	978	DZW30	167
100	450	300	240	200	150	48	8-34	3	4.5	1043	DZW30	211
125	525	355	285	238	176	60	8-41	3	4.5	1248	DZW60	424
150	600	390	318	270	204	66	12-41	3	4.5	1394	DZW90	588
200	750	480	400	345	260	78	12-48	3	4.5	1621	DZW120	839
250	580	580	485	425	313	88	12-54	3	4.5	2010	DZW180	896
300	665	665	570	510	364	100	16-54	3	4.5	2168	DZW250	1179

注:根据客户需要可提供气动和齿轮传动闸阀产品
Note: According to customer needs can provide pneumatic and gear drive valve products

型号编制说明 Model Schedule Illustration

□ □ □ □ □ □ □ □ — □ □

- 阀体材料代号 Body material code
- 压力等级代号 Pressure grade code
- 密封面材质代号 Sealing formation code
- 结构特点代号 Structure manner code
- 结构形式代号 Design feature code
- 连接形式代号 Connecting type code
- 驱动方式代号 Driving manner code
- 阀门类型代号 Valve type code
- 特殊要求代号 Special requirement code
- 系列代号 Series code

特殊要求代号：K—抗硫型L—调节型ZB—自动补偿

阀门类型代号：Z—闸阀

驱动方式代号：4—正齿轮传动5—伞齿轮传动6-气动6s-气动带手动7—液动9—电动(手轮传动略)9e-防爆电动

连接形式代号：4—法兰连接6—对焊连接

结构形式代号：3—明杆平行式单闸板4—明杆平行式双闸板

结构特点代号：W—无导流孔(有导流孔省略)P—轻型

密封面材质代号：Y—硬质合金H—合金钢D—渗氮钢F—增强聚四氟乙烯

压力等级代号：公称压力为MPa的10倍、磅级为实际数

阀门材料代号：C—WCB　I—WC6, ZG1Cr5Mo　V—WC9, ZG20CrMoV　P—CF8, ZG1Cr18Ni9Ti
R—CF8M, ZG1Cr18Ni12Mo2Ti　S—CF3　L—CF3M　F—LCB N—LC3

例1: Z543WF-16C

注释：公称压力为1.6MPa, 伞齿轮传动、法兰连接、无导流孔、明杆平行式单闸板闸阀，阀体材质为WCB, 密封面材质为增强聚四氟乙烯。

例2: KZ9B44Y-150Lb

注释：压力等级为Class150, 防爆电动、法兰连接、有导流孔、抗硫明杆平行式双闸板闸阀，阀体材质为WCB, 密封面材质为硬.质合金。

Special requirement code: K—Antisulphur model L—Adjustment type ZB—Auto compensation

Valve type code: Z—Gate valve

Driving manner code: 4—Spur gear transmission 5—Bevel gear transmission 6—Air driving 6s—Take pneumatically manually 7—Hydrodynamic driving 9—Electric driving (Hand wheel driving omitted) 9B—Explosion electric driving

Connecting type code: 4—Flange-connecting 6—Butt welding connecting

Design feature code:3—Rising-stem parallel single-disc 4—Rising-stem parallel double-disc

Structure manner code: W—Non-diversion hole type (Diversion hole type omitted) P—Light-duty

Sealing formation code: Y—Hard alloy H~Alloy steel D~Nitriding steel F—Intensified polytetrafluoroethylene(PTFE)

Pressure grade code: The 10 times of the nominal pressure MPa, pound grade io practical number

Body material code: C—WCB　I—WC6, ZG1Cr5Mo　V—WC9, ZG20CrMoV　P—CF8, ZG1Cr18Ni9Ti　R—CF8M, ZG1Cr18Ni12Mo2Ti
S—CF3　L—CF3M　F—LCB　N—LC3

Example1:Z543WF-16C

Denoting 1.6MPa nominal rating pressure, bevel gear transmission, flange-connecting, nondiversion hole, Rising-stem parallel single-disc, WCB valve body material and the Intensified polytetrafluoroethylene(PTFE) as sealing material.

Example2: KZ9B44Y-150Lb

Denoting Class150 pressure grade, explosion electric driving, flange-connecting, diversion hole type, antisulphur rising-stem parallel double-disc gate valve, WCB valve body material and the hard alloy sealing material.

Flat-Plate Gate Valve
平板闸阀

产品结构特点 Products Design Features

1. 阀体有铸造和焊接两种结构。
2. 阀座采用O形密封圈密封和施加预紧力的浮动阀座结构，使阀门进出口双向密封；并且该结构的启闭力矩仅为普通阀门的1/2，能达到轻松开/关阀门。
3. 修阀座采用密封面上镶嵌PTFE, 具有PTFE对金属和金属对金属的双重密封，PTFE密封面同时清除闸板脏物的作用。
4. 金属对金属密封的阀门，阀体外部设有注油脂结构，油脂通过注脂器、阀座进入阀门密封面，使阀门达到零泄漏。
5. 带导流孔阀门的闸板，无论是全开或是全关始终与密封面吻合，密封面得到保护不受介质直接冲刷，从而延长使用寿命。
6. 阀门在全开时，通道平滑为直线，流阻系数极小，无压力损失，可通毛球清扫管线。
7. 本阀门采用带自密封能力的填料结构，无需经常调节，开/关极为轻便，且密封性可靠，填料函处设有辅助密封油脂注入结构，密封性能绝对可靠，真正达到零泄漏；解决了通用阀门填料处最容易外漏的弊病。
8. 阀门关闭时能自动卸掉内腔高压(详见工作原理图)，保证使用安全。
9. 全封闭结构，防护性能好，可适应全天候要求。
10. 阀门设有指示杆或观察窗以表示阀门的启闭情况。

1. Cast and weld two structures with the body
2. The seat ring uses the floating seat ring structure with o-seal ring sealed and pre-tightening force applied to have inlet and outlet dual-way sealed; and the open-close moment with this structure is 1/2 that of the common valves only, able to lightly open and close valves.
3. The seat ring uses the sealing face inlaid with PTFE, so has dual seals of PTFE to metal and metal to metal, the PTFE sealing face also acts as removing the dirt on the wedge disc.
4. For the valve with the metal to metal seal, there is grease injector outside of it, grease gets into the sealing face through the injector and the seat ring to have the valve up to null leak.
5. The wedge disc of the valve with flow guide hole is always fitted with the sealing face whether in full open or full close status to have the sealing face protected without being directly eroded by the medium so as to extend the duration.
6. When fully opened, the valve's channel is smooth and linear, with an extremely small flow resisting coefficient and no pressure loss, and the pipe-line can be cleaned with hair-ball through it.
7. This valve uses the packing structure with the ability of self-seal, needs no constant adjustment, features very light open and close and a reliable seal. An assisting sealing grease injection structure is set in the packing to have the sealing performance absolutely reliable and get a true null leak, settling the problem for the packing place of universal valves to be easiest leak outward.
8. Automatic removal of the high pressure in the internal cavity when the valve is about to close (see the working principle diagram for the details) so as to ensure safety.
9. Fully sealed structure leaves a good protective property, suitable for the requirement of 24-hour duty.
10. An indication rod or viewing window is set with the valve to show the open-close condition.

产品性能规范 Products Performance Specification

压力等级 Pressure		常温试验压力(MPa) Testing pressure at constant temperature (Mpa)				适用温度 Applicable temperature	适用介质 Applicable medium	
		壳体试验 The shell testing	左密封 The left sealing	右密封 Right sealing	低压气密封 Low pressure air tightness		普通型 Ordinary type	抗硫型 Anti sulphur type
公称压力 (MPa) Nominal pressure (PN)	1.6	2.4	1.76	1.76	0.6	-29~121°C 或按用户要求	石油、天然气、水等非腐蚀性介质	含H_2S、CO_2的石油、天然气、水等腐蚀性介质
	2.5	3.75	2.75	2.75	0.6			
	4.0	6.0	4.4	4.4	0.6			
	6.4	9.6	7.04	7.04	0.6			
	10.0	15.0	11.0	11.0	0.6			
	16.0	24.0	17.6	17.6	0.6	-29~121°C or upon the user requirement	Petroleum, natural gas.water etc.non-corrosive media	Petroleum,natural gas, water etc, containing H_2S, CO_2 corrosive media
磅级(Lb) Pound grade (Class)	150	3.0	2.2	2.2	0.6			
	300	7.5	5.5	5.5	0.6			
	600	15.0	11.0	11.0	0.6			
	900	22.5	17.5	17.5	0.6			

工作原理 Working Principle

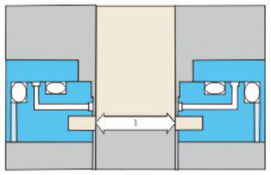

图1

1. 阀门内部压力相当时(1), 闸板处于闭合状态，阀座表面PTFE密封环形成初始密封，每次阀门开或关时，阀座圈能清洁闸板两侧。(如图1)

With equal pressure throughout the valve (and the gate in closed position), and initial seal (1) is formed with the raised PTFE ring on the faces of the seats. (The seat-inserts clean both sides of the gate each time the valve is opened or closed)

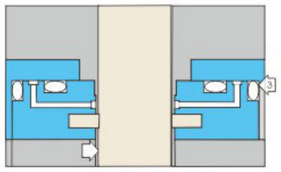

图2

2. 对阀门施加管道压力时(2)，压力作用于闸板，迫使它贴近出口阀座上的PTFE环，压缩它直到闸板停在钢制阀座上，这样就形成了双重密封，首先是PTFE对金属密封，然后是金属对金属密封，阀座也被牢固地推到凹槽，在这一点(3), O形圈阻止任何后部介质流。(如图2)

As line pressure (2) is applied to the valve, it acts on the gate, forcing it against the PTFE ring on the downstream seat, compressing it until the seat against the steel seat. Thus, a double seal is formed...first, a PTFE-to-metal seal; then, metal-to-metal. The seat is also forced firmly into its recess. The O-ring (3) prevents any downstream flow at this point.

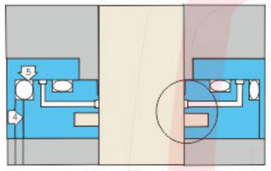

图3

3. 阀腔压力泄放后，形成进口密封，管道压力作用于进口阀座(4)，使其移向闸板，这时形成PTFE对金属的密封，同时，O形圈(5)与阀座凹槽形成紧密的密封。(如图3)

Upstream seal is provided when valve cavity pressure is bled off. This is caused by the force of line pressure acting against the upstream seat (4) moving the seat against the gate and providing a tight PTFE-to metal seal at this point. At the same time, the O-ring (5) forms a tight seal with the seat recess.

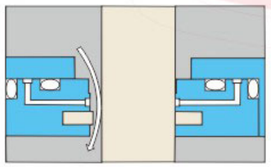

图4

4. 阀门自动泄放多余的压力，当阀腔压力大于管道压力时，由于热膨胀，进口阀座推向凹槽，阀腔内多余的压力在阀座与闸板之间泄放到管道中。(如图4)

Valve automatically relieves itself of excessive valve cavity pressure. When valve cavity pressure exceeds line pressure...from such causes as thermal expansion...the upstream seat is forced back into its recess and the excess pressure in the valve cavity is bled between the seat and the gate into the line.

产品主要参数 Main Parameter Of The Products

基本型号 Serial models	**SY(K)Z43WF、SY(K)Z43WY、SY(K)Z43WD、SY(K)Z44WF、SY(K)Z44WY、SY(K)Z44WD SY(K)Z543WF、SY(K)Z543WY、SY(K)Z543WD、SY(K)Z544WF、SY(K)Z544WY、SY(K)Z544WD SY(K)Z643WF、SY(K)Z643WY、SY(K)Z643WD、SY(K)Z644WF、SY(K)Z644WY、SY(K)Z644WD SY(K)Z943WF、SY(K)Z943WY、SY(K)Z943WD、SY(K)Z944WF、SY(K)Z944WY、SY(K)Z944WD**			
压力等级范围 Pressure grade range	PN1.6~15.0MPa			Class150~900
通径范围 Drift diameter range	DN25~ 1000mm			1"~40"
驱动方式 Driving manner	手轮驱动 Hand wheel driving			齿轮动、气动、液动、电动 Gear driving, air-operating, hydrodynamic driving and electric driving
适用范围 Scope of application	Class150~300 (PN1.6-4.0)	Class400 (PN6.4)	Class600~900 (PN10.0-15.0)	Class150~900
	1"~40" (DN25~ 1000mm)	1"~28" (DN25-700mm)	1"-12" (DN25-300mm)	1"~4" (DN25~1000mm)

Flat-Plate Gate Valve
平板闸阀

流量特性分析

带导流孔的平板闸阀，其流量特性等同于同规格的管道，呈等百分比特性，不带导流孔的平板闸阀，其中腔跨度较楔式闸阀小，且属于规则的圆柱体，所以，基本上除压力损失较带导流孔的大外，其余特性基本接近。不带导流孔调节型的平板闸阀其对流量的调节特性优于普通不带导流孔的平板闸阀。

Flow Charalteristic

The flow characteristic of flat gate valves with a diversion hole is equal to that of pipelines of thesame specification. The characteristic is shown in per centum form. As for valves without a diversion hole, its cavity fly span is smaller than that of wedge gate vales and it is a regular cylindrical object,therefore.characteristics of the valves are similar except that they have a larger pressure loss.Besides, their flux adjustment behavior is better than that of the ones with a deversion hole.

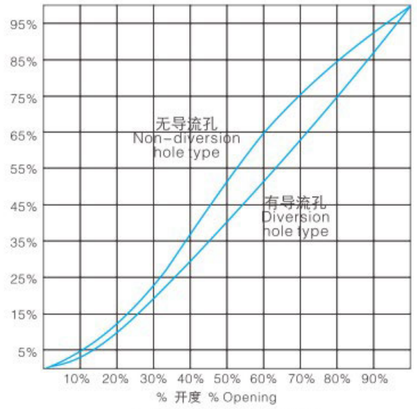

阀门开度—Cv特性曲线表
Valve-opening—Cv characteristic graph

各类型闸板外形图 Outside Drawing of Different Types of Shutter

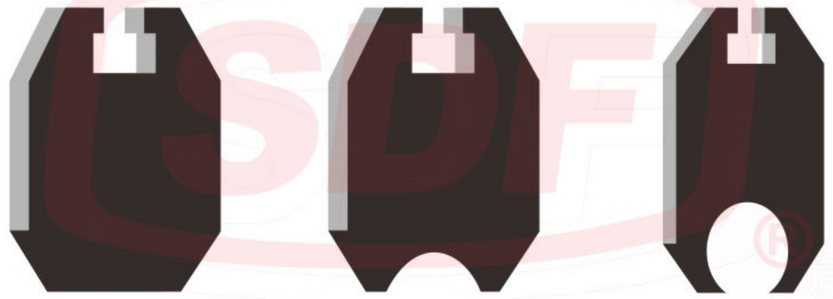

普通型闸板
Ordinary type

调节型闸板
Adjustment type

带导流孔型闸板
Type a diversion hole

带导流孔型平板闸阀的 DN—Cv曲线图 DN - Cv Graph of Flat Valves With a Diversion Hole

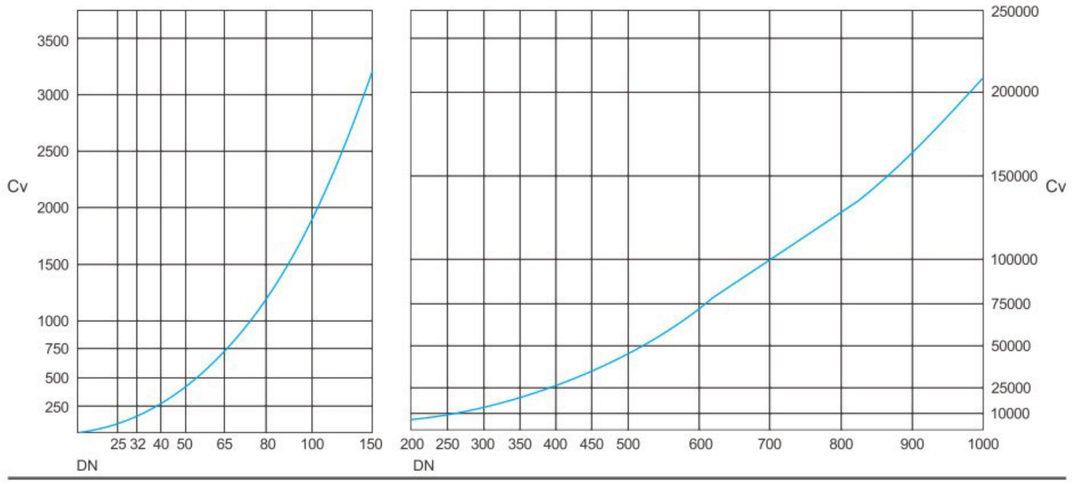

(K)ZF44XY(K)ZF 9/544 XY-(1.6-42.0MPa)

试验压力 Experimental Pressure

公称压力 PN (MPa)	壳体 Shell body	密封(液) Seal (liquid)	密封(气) Seal(liquid)	上密封 Upper Seal
1.6	2.4	1.8	0.6	1.8
2.5	3.8	2.8	0.6	2.8
4.0	6.0	4.4	0.6	4.4
6.4	9.6	7.0	0.6	7.0
10.0	15.0	11.0	0.6	11.0
16.0	24.0	18.0	0.6	18.0

适用范围 Suitable Conditions

壳体材料 Material for shell body	适用介质 Applicable medium	适用温度°C Suitable Temperature
碳素钢(C型) Carbon steel (type C)	水、蒸气、油品 Water、smoke、oil	≤425°C
铬镍钛钢(P型) Chrom- nickel titanium steel (Type P)	硝酸类 Same kinds of nitric acid	≤200°C
铬镍钼钛钢(R型) Chrome- nickel molybdenm titanium steel	醋酸类 Same kinds of vingar acid	≤200°C
铬钼钢(I型) Chrome- molybdenm steel	水、蒸A气、油品 Water, smoke, oil	≤550°C

主要零件材料 Materials For Mainparts

阀体、阀盖 Body, Cover	闸板、阀座 Gate, Seat	阀杆 Valve Bar	阀杆螺母 Stem nut	填料 Stuffing	手轮 Hand wheel
碳素钢 Carbon Steel	优质钢+硬质合金或不锈钢 High quality steel hard quality alloy/ stainless steel	铬钼钢 Chrome stainless steel	铝青铜 Aluminium-bronze	石墨石棉盘根 Black lead Asbestos	可锻铸钢 Malleable iron
铬镍钛钢 Chrom- nickel titanium steel (Type P)	不锈钢、不锈钢+硬质合金或不锈钢 Stainless steel / Stainless steel+ hard quality alloy	铬镍钼钛钢 Chrome-nickel titanium stainless	铝青铜 Aluminium-bronze	聚四氟乙烯 PTFE	可锻铸钢 Malleable iron
铬镍钼钛钢 Chrome- nickel molybdnum titanium steel	不锈钢、不锈钢+硬质合金或不锈钢 Stainless steel / Stainless steel+ hard quality alloy	铬镍钼钛钢 Chromenickel - molybdnum titanium stainless steel	铝青铜 Aluminium-bronze	烯石棉盘根 Ethylene Asbestos	可锻铸钢 Malleable iron
铬钼钢 Chromemolybdenm steel	合金钢+硬质合金 Alloy steel + hard quality alloy	铬钼铝钢 Chromemolybdnum aluminium steel	铝青铜 Aluminium-bronze	柔性石墨 Expanded graphite	铬钼可锻铸铁 Malleable and Chrome molybdenumiron

注：抗流阀门型号前加(K)
Note: Put “K”in front of the code of the choking valve

Double-Disc Parallel Gate Valve
平行式双闸板闸阀

(K)ZF44XY(K)ZF 9/544 XY-(1.6-42.0MPa)

主要外形尺寸和连接尺寸 Main Dimensions and Connection Dimensions

公称通径 DN(mm)	L	D	D1	D2	b	f	z-d	H	H1	D0	重量WT (kg)
	ZF44XY-16C ZF44XY-16P ZF44XY-16R ZF44XY-16I										
20	150	105	75	55	14	2	4-14	255	284	140	6.5
25	160	115	85	65	14	2	4-14	275	303	160	9
32	180	135	100	78	14	2	4-18	280	321	180	12
40	200	145	110	85	16	3	4-18	300	352	200	36.5
50	250	160	125	100	16	3	4-18	358	438	240	29
65	265	180	145	120	18	3	4-18	375	450	240	33
80	280	195	160	135	20	3	8-18	433	528	280	45
100	300	215	180	155	20	3	8-18	502	620	300	63
125	325	245	210	185	22	3	8-18	612	753	325	108
150	350	280	240	210	24	3	8-23	676	847	340	134
200	420	335	295	265	26	3	12-23	820	1039	400	192
250	470	405	355	320	30	3	12-25	969	1245	450	273
300	500	460	410	375	30	3	12-25	1142	1472	500	379
350	550	520	470	435	34	4	16-25	1280	1450	550	590
400	600	580	525	485	36	4	16-25	1452	1887	600	850
450	650	640	585	545	40	4	20-30	1541	2011	700	907
500	700	705	650	608	44	4	20-34	1676	2181	700	958
600	800	840	770	718	48	5	20-41	1874	2346	800	1112
	ZF44XY-25 ZF44XY-25P ZF44XY-25R ZF44XY-25I										
20	150	105	75	55	16	2	4-14	255	284	140	7
25	160	115	85	65	16	2	4-14	375	303	160	11
32	180	135	100	78	18	2	4-18	280	321	180	14
40	200	145	110	85	18	3	4-18	300	352	200	30
50	250	160	125	100	20	3	4-18	358	438	240	34
65	265	180	145	120	22	3	8-18	375	450	260	36
80	280	195	160	135	22	3	8-18	433	528	280	50
100	300	230	190	160	24	3	8-23	502	620	300	69
125	325	270	220	188	28	3	8-25	612	753	325	116
150	350	300	250	218	30	3	8-25	676	847	340	141
200	420	360	310	278	34	3	12-25	820	1039	400	223
250	470	425	370	332	36	3	12-30	969	1245	450	317
300	500	485	430	390	40	4	16-30	1142	1472	500	400
350	550	550	490	448	44	4	16-34	1280	1450	550	630
400	600	610	550	505	48	4	16-34	1452	1887	600	900
450	650	660	600	555	50	4	20-34	1541	2011	700	1013
500	700	730	660	610	52	4	20-41	1676	2181	700	1166
600	800	840	770	718	56	5	20-41	1874	2346	800	1258

(K)ZF44XY(K)ZF 9/544 XY-(1.6-42.0MPa)

主要外形尺寸和连接尺寸 Main Dimensions and Connection Dimensions

公称通径 DN(mm)	L	D	D1	D2	D6	b	f	f	z-d	H	H1	D0	重量WT (kg)
ZF44XY-40C ZF44XY-40P ZF44XY-40R ZF44XY-40I													
20	150	105	75	55	51	16	2	4	4-14	256	285	140	8
25	160	115	85	65	58	16	2	4	4-14	275	305	160	9.3
32	180	135	100	78	66	18	2	4	4-18	287	322	180	12
40	200	145	110	85	76	18	3	4	4-18	323	369	200	16.5
50	250	160	125	100	88	20	3	4	4-18	372	440	200	29
65	280	180	145	120	110	22	3	4	8-18	395	473	280	39
80	310	195	160	135	121	22	3	4	8-18	457	552	300	52
100	350	230	190	160	150	24	3	4.5	8-23	552	671	300	80
125	400	270	220	188	176	28	3	4.5	8-25	634	726	325	127
150	450	300	250	218	204	30	3	4.5	8-25	708	883	340	154
200	550	375	320	282	260	38	3	4.5	12-30	858	1086	400	263
250	650	445	385	345	313	42	3	4.5	12-34	1015	1298	450	368
300	750	510	450	408	364	46	4	4.5	16-34	1203	1535	500	547
350	850	570	510	465	422	52	4	5	16-34	1341	1678	700	679
400	950	655	585	535	474	58	4	5	16-41	1492	1903	800	953
ZF44XY-64 ZF44XY-64P ZF44XY-64R ZF44XY-64I													
20	190	125	90	68	51	20	2	4	4-18	258	288	180	9
25	210	135	100	78	58	22	2	4	4-18	310	341	10	11
32	230	150	110	82	66	24	2	4	4-23	320	353	200	14
40	240	165	125	95	76	24	3	4	4-23	360	389	240	30
50	250	175	135	105	88	26	3	4	4-23	372	448	280	39
65	280	200	160	130	110	28	3	4	8-23	395	475	280	43
80	310	210	170	140	121	30	3	4	8-23	458	553	300	60
100	350	250	200	168	150	32	3	4.5	8-25	553	679	300	89
125	400	295	240	202	176	36	3	4.5	8-30	638	779	325	140
150	450	340	280	240	204	38	3	4.5	8-34	718	993	340	207
200	550	405	345	300	260	44	3	4.5	12-34	873	1100	400	325
250	650	470	400	352	313	48	3	4.5	12-41	1053	1332	450	467
300	750	530	460	412	364	54	4	4.5	16-41	1203	1535	500	590

Double-Disc Parallel Gate Valve
平行式双闸板闸阀

(K)ZF44XY(K)ZF 9/544 XY-(1.6-42.0MPa)

主要外形尺寸和连接尺寸 Main Dimensions and Connection Dimensions

公称通径 DN(mm)	L	D	D1	D2	D6	b	f	f2	z-d	H	H1	D0	重量WT (kg)
ZF44XY-100 ZF44XY-100P ZF44XY-100R ZF44XY-100I													
25	210	135	100	78	58	24	2	4	4-18	310	341	200	13
32	230	150	110	82	66	24	2	4	4-18	320	353	240	20
40	240	165	125	95	76	26	3	4	4-23	360	389	280	32
50	250	195	145	112	88	28	3	4	4-23	490	558	360	50
65	280	220	170	138	110	32	3	4	8-25	540	622	400	83
80	310	230	180	148	121	34	3	4	8-25	573	671	400	100
100	350	265	210	172	150	38	3	4	8-30	575	671	400	110
125	400	310	250	210	176	42	3	4.5	8-34	744	892	560	180
150	450	350	290	250	204	46	3	4.5	12-34	800	972	560	250
200	550	430	360	312	260	54	3	4.5	12-41	800	972	560	360
250	650	500	430	382	313	60	3	4.5	12-41	1050	1305	640	485
300	750	585	500	442	364	70	4	4.5	16-48	1208	1506	640	633
ZF44XY-160 ZF44XY-160P ZF44XY-160R ZF44XY-160I													
20	190	130	90	62	51	26	2	4	4-23	260	288	200	13
25	210	140	100	72	58	28	2	4	4-23	280	310	280	16
32	230	165	115	85	66	30	2	4	4-25	312	350	320	23
40	240	175	125	92	76	32	3	4	4-25	350	395	320	36
50	300	215	165	132	88	36	3	4	8-25	512	612	360	63
65	340	245	190	152	110	44	3	4	8-30	560	677	360	110
80	390	260	205	168	121	46	3	4	8-30	585	686	400	141
100	450	300	240	200	150	48	3	4.5	8-34	631	751	450	185
125	525	355	285	238	176	60	3	4.5	8-41	723	868	560	320
150	600	390	318	270	204	66	3	4.5	12-41	820	997	640	462
200	750	480	400	345	250	78	3	4.5	12-48	990	1224	720	711

Double-Disc Parallel Gate Valve
平行式双闸板闸阀

(K)ZF44XY(K)ZF 9/544 XY-(1.6-6.4MPa)

概述 Descriptions

本公司专业生产各类管线平板闸阀，根据各油田输油管线需要，为增大空间便于阀门在管线安装而特别研制成功，短体平行式双闸板闸阀，该产品设计合理，结构紧凑，具有耐磨双闸板结构。双向启闭，开关灵活，密封性能可靠，抗擦伤性能好，具有通球扫线和进出口同时密封功能。

This valve owns features of friction resisting structure, reliable seal, excellent anti, wearing ability, dual-way open-close, and easy operation, also can be cleaned with hair-ball through it.

主要特点及用途 Characteristics & Applications

1. 阀门整体结构根据压力不同分别采用扁体和圆体结构。
2. 阀座采用金属圈镶嵌PTFE, 具有先软后硬的双重密封。
3. 阀板采用不锈钢或碳钢，表面MOSZ特殊处理。
4. 浮动阀座的活塞效应可使阀门进出口同时密封。

1. Flat or rounded structure is adopted according to different pressures.
2. The seat has structure of metal ring inlaid with FTFE, which ensures the seal ability of soft and then hard The disc adopts stainless steel or carbon
3. steel material, and its surface is treated with MOSZ.
4. Piston effect of floating seat leads to dual-way seal for inlet outlet of the valve.

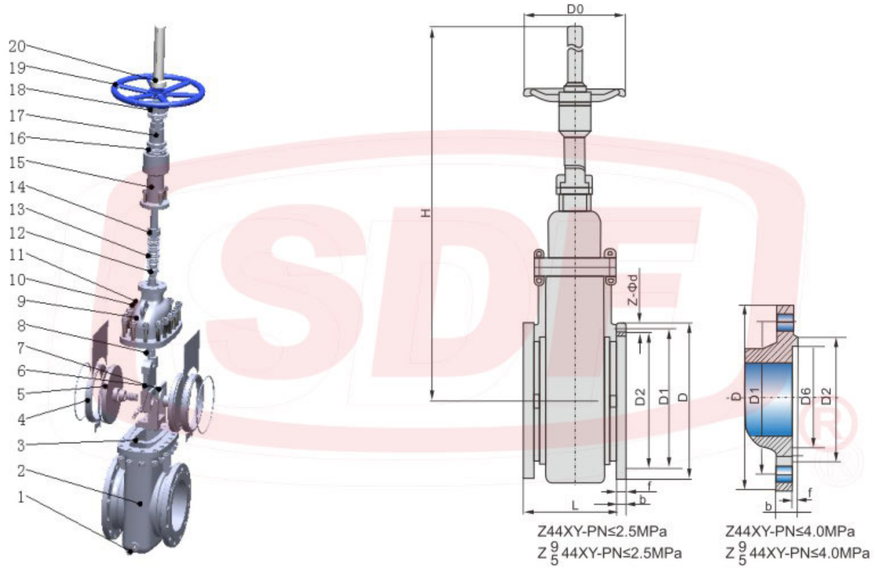

Z44XY-PN≤2.5MPa
Z$\frac{9}{5}$44XY-PN≤2.5MPa

Z44XY-PN≤4.0MPa
Z$\frac{9}{5}$44XY-PN≤4.0MPa

注：抗流阀门型号前加(k) Note:put"k"in Front Of The Code Of The Choking Valve

序号 No.	零件名称 Part name	材料 Material			
		普通型 Ordinary type		抗硫型 Antisulphur type	
		GB	ASTM	GB	ASTM
1	排污堵头 Blowdowm stops	25+Zn	A105+Zn	1Cr18Ni9	A276-304
2	阀体 Body	WCB	A216-WCB	WCB	A216-WCB
3	垫片面性 Gasket	柔性石墨+1Cr18Ni9 Graphite+1Cr18Ni9	柔性石墨+304 Graphite+304	柔性石墨+1Cr18Ni9 Graphite+1Cr18Ni9	柔性石墨+304 Graphite+304
4	阀座 Seat	16Mn+PTFE	A105+PTFE	1Cr18Ni9+PTFE	A276-304+PTFE
5	闸板 Gate disc	16Mn+NPT	A105Mn+NPT	1Cr18Ni9	A276-304
6	主撑板 Main supportiang plate	WCB	A216-WCB	WCB	A216-WCB
7	副撑板 Side plate	WCB	A216-WCB	WCB	A216-WCB
8	阀杆 Steam	2Cr13	A276-420	1Cr18Ni9	A276-304
9	阀盖 Bonnet	WCB	A216-WCB	WCB	A216-WCB
10	螺柱 Stud	35CrMoA	A193-B7	35CrMoA	A193-B7
11	螺母 Nut	45	A194-2H	45	A194-2H
12	填料垫 Packing Seat	2Cr13	A276-420	2Cr13	A276-304
13	填料 Packing	PTFE	PTFE	PTFE	PTFE
14	填料压套 Packing Gland	25	A105	25	A105
15	支架 Yoke	WCB	A216-WCB	WCB	A216-WCB
16	轴承 Bearing	Bearing steel	Bearing steel	Bearing steel	Bearing steel
17	阀杆螺母 stem nut	ZQAL9-4	C95500	ZQAL9-4	C95500
18	压盖 Gland	25	A105	25	A105
19	手轮 Hand Wheel	WCB	A216-WCB	WCB	A216-WCB
20	指示罩 Indicating cover	25	A105	25	A105

Double-Disc Parallel Gate Valve
平行式双闸板闸阀

(K)ZF44XY(K)ZF 9/544 XY-(1.6-6.4MPa)

主要外形尺寸和连接尺寸 Main Dimensions and Connection Dimensions

公称通径DN (mm)	L	D	D1	D2	b	f	z-b	H	D0
1.6MPa									
25	165	115	85	65	14	2	4-14	360	180
32	165	135	100	78	16	2	4-18	375	180
40	178	145	110	85	16	3	4-18	410	250
50	178	160	125	100	16	3	4-18	450	250
65	190	180	145	120	18	3	4-18	550	300
80	203	195	160	135	20	3	8-18	610	300
100	229	215	180	155	20	3	8-18	700	300
125	254	245	210	185	22	3	8-18	798	350
150	267	280	240	210	24	3	8-23	895	350
200	292	335	295	265	26	3	12-23	1130	350
250	330	405	355	320	30	3	12-25	1290	400
300	356	460	410	375	30	3	12-25	1480	450
350	381	520	470	435	34	4	16-25	1660	450
400	406	580	525	485	36	4	16-30	1850	500
450	432	640	585	545	40	4	20-30	2080	500
500	457	705	650	608	44	4	20-34	2300	600
600	508	840	770	718	48	5	20-41	2680	800
2.5MPa									
25	15	115	85	65	16	2	4-14	360	180
32	165	135	100	78	18	2	4-18	375	180
40	178	145	110	85	18	3	4-18	410	250
50	178	160	125	100	20	3	4-18	450	250
65	90	180	145	120	22	3	8-18	550	300
80	203	195	160	135	22	3	8-18	610	300
100	229	230	190	160	24	3	8-23	700	300
125	254	270	220	188	28	3	8-25	798	350
150	267	300	250	218	30	3	8-25	895	350
200	292	360	310	278	34	3	12-25	1130	350
250	330	425	370	332	36	3	12-30	1290	400
300	356	485	430	390	40	4	16-30	1480	450
350	381	550	490	448	44	4	16-34	1660	450
400	406	610	550	505	48	4	16-34	1850	500
450	432	660	600	555	50	4	20-34	2080	500
500	457	730	660	610	52	4	20-41	2300	600
600	508	840	770	718	56	5	20-41	2680	800

Double-Disc Parallel Gate Valve
平行式双闸板闸阀

(K)ZF44XY(K)ZF 9/544 XY-(1.6-6.4MPa)

主要外形尺寸和连接尺寸 Main Dimensions and Connection Dimensions

公称通径 DN(mm)	L	D	D1	D2	D6	b	f	f1	z-b	H	D0
					4.0MPa						
25	165	115	85	65	58	16	2	4	4-14	370	180
32	165	135	100	78	66	18	2	4	4-18	385	180
40	178	145	110	85	76	18	3	4	4-18	420	250
50	216	160	125	100	88	20	3	4	4-18	458	250
65	241	180	145	120	110	22	3	4	8-18	555	300
80	283	195	160	135	121	22	3	4.5	8-18	615	300
100	305	230	190	160	150	24	3	4.5	8-23	710	300
125	381	270	220	188	176	28	3	4.5	8-25	790	300
150	403	300	250	218	204	30	3	4.5	8-25	900	350
200	419	375	320	282	260	38	3	4.5	12-30	1135	350
250	457	445	385	345	313	42	3	4.5	12-34	1401	400
300	502	510	450	408	364	46	3	4	16-34	1580	450
					6.4MPa						
50	216	175	135	105	88	26	3	4	4-23	458	300
65	241	200	160	130	110	28	3	4	8-23	555	300
80	283	210	170	140	121	30	3	4.5	8-23	615	350
100	305	250	200	168	150	32	3	4.5	8-25	710	350
125	381	295	240	202	176	36	3	4.5	8-30	796	400
150	403	340	280	240	204	38	3	4.5	8-34	900	400
200	419	405	345	300	260	44	3	4.5	12-34	1135	500
250	457	470	400	352	313	48	3	4.5	12-41	1401	500
300	502	530	460	412	364	54	4	4.5	16-41	1580	600

Auto Compensation Balanced Double Parallel Gate Valve
自动补偿平衡式双平板闸阀

产品结构特点 Products Design Features

自动补偿平衡式双平板闸阀是一种结构新颖的闸阀产品，它具有启闭力矩小、速度快、振动小、使用寿命长、操作安全可靠等特点，主要用于气、液体输送管道的切断或泄放。

Auto compensation balanced double parallel gate valve is a product with new structure, which has small open-and-close moment, high speed, little vibration,long performance life and reliable operation.It is mainly applied to cut-off or discharge of gas and liquid delivery pipelines.

系列平行式双闸阀结构特点 The Structural Features Include

1. 阀门采用两块互相平行的闸板及其楔紧装置组成的密封结构取代传统的楔式闸阀结构。
2. 阀门密封机构各零件互相分离，即使在温度变化时引起变形也仍能保证密封，且不会因高温膨胀而使闸板挤住打不开。
3. 阀门密封采用耐磨、耐腐蚀材料制成，延长了阀门的使用寿命。
4. 在高温、高压情况下，进口一侧闸板设计为可泄压方式，防止由于温度变化而引起的腔内压力异常升高的现象，保证使用安全。
5. 全封闭结构，防护性能好，可全天候使用。

1. A sealing structure consists of two parallel shutters and a wedge-tightening device it is taken to replace the traditional wedg eshaped gate valve structure;
2. The components of valve sealing mechanism are separated so the sealing can retain when transmuting caused by the tem perature changes,and will not jam where swelling in high temperature;
3. The sealing surface of the valve adopts abrasion-resistant and anti-corrosive materials which can lengthen the performance life of the valve;
4. In high temperature or pressure,the disc on inlet side can be designed in pressure relief style which can avoid abnormal pressure rising in cavity caused by temperature changes.thus to ensure used safety.
5. The valve adopts full-shut structure which has good protection function and can be used in all weather.

产品主要参数 Main Parameter of The Products

基本型号 Serial models	SY(K)Z44WH(Y)、SY(K)Z544WH(Y)、SY(K)Z644WH(Y)、SY(K)Z744WH(Y)、SY(K)Z944WH(Y) SY(K)Z64WH(Y)、SY(K)Z564WH(Y)、SY(K)Z664WH(Y)、SY(K)Z764WH(Y)、SY(K)Z964WH(Y)		
压力等级范围 Serial models	PN16~100		Class150~600
通径范围 Drift diameter range	DN50~1000mm		2"~40"
驱动方式 Driving manner	手轮驱动 Hand wheel driving		齿轮动、电动、液动、气动 Gear driving,air-operating,hydrodynamic driving, electric driving
适用范围 Scope of application	Class150~300 (PN1.6~4.0)	Class400 (PN6.4)	Class600 (PN10.0)	Class150~900
	2"~6" (DN50~150mm)	2"~4" (DN50~100mm)	2"~3" (DN50~80mm)	4"~36" (DN100~900mm)

注：本公司可根据用户要求提供产品。Notes: Our company can provide products at customres'request.

产品性能规范 Products Performance Specification

压力等级 Pressure		常温试验压力(MPa) Testing pressure at constant temperature (Mpa)				适用温度 Applicable temperature	适用介质 Applicable medium	
		壳体试验 The shell testing	左密封 The left sealing	右密封 Right sealing	低压气密封 Low pressure air tightness		普通型 Ordinary type	抗硫型 Antisulphur type
公称压力(MPa) Nominal rating	**1.6**	2.4	1.76	1.76	0.6	-29~121°C 或按用户要求 -29 ~121°C or upon the user requirement	石油、天然气、水等非腐蚀性介质 Petroleum, naturalgas, wateretc.non-corrosive media	含H_2S, CO_2的石油、天燃气、水等腐蚀性介质 Petroleum, natural gas, water etc, containing H_2S, CO_2 corrosive media
	2.5	3.75	2.75	2.75	0.6			
	4.0	6.0	4.4	4.4	0.6			
	6.4	9.6	7.04	7.04	0.6			
	10.0	15.0	11.0	11.0	0.6			
磅级(Lb) Pound grade	**150**	3.0	2.2	2.2	0.6			
	300	7.5	5.5	5.5	0.6			
	600	15.0	11.0	11.0	0.6			

Auto Compensation Balanced Double Parallel Gate Valve
自动补偿平衡式双平板闸阀



产品采用标准 Technical Specification

设计依据 Design reference		GB	API
设计标准 Design standard		JB/T5298 GB/T19672	API 6D ASME B 16.34
结构长度 Structural length	法兰 Flanged	GB/T 12221 GB/T19672,JB/T 5298	API 6D ASME B 16.10
	焊接 Weided connection	GB/T15188.1 GB/T19672	
连接法兰 Flange ends		GB/T9113 GB/T 79	ASME B 16.5 MSS SP44
对焊端 Butt-weldingends		GB/T 12224	ASME B 16.25
试验和检验 Teat & inspection		GB/T 9092	API 6D API 598

注:阀门连接法兰尺寸可根据要求设计制造。
Note: The sizes of valve connecting flange can be designed according to customers'requirement.

主要零件材料 Main Parts Material

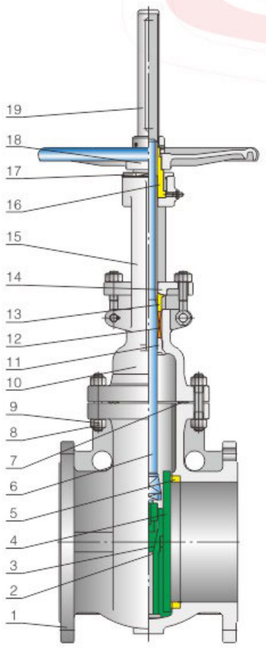

序号 No.	零件名称 Part name	材料 Materia			
		普通型 Ordinary type		抗硫型 Antisulphur type	
		GB	ASTM	GB	ASTM
1	阀体Body	WCB	A216-WCB	WCB	A216-WCB
2	闸板架Disc frame	WCB	A216-WCB	WCB	A216-WCB
3	楔块 Wedge block	WCB+STL	A216-WCB+STL	WCB+STL	A216-WCB+STL
4	闸板Disc	25+STL	A105+STL	1Cr18Ni9+STL	A276-304+STL
5	阀座Seat	25+STL	A105+STL	1Cr18Ni9+STL	A276-304+STL
6	阀杆Stem	2Cr13	A276-410	1Cr18Ni9	A276-304
7	垫片Gasket	柔性石墨Graphite +1Cr18Ni9	柔性石墨Graphite +1Cr18Ni9	柔性石墨Graphite +1Cr18Ni9	柔性石墨Graphite +1Cr18Ni9
8	螺柱Stud	35CrMoA	A193-B7	35CrMoA	A193-B7
9	螺母Nut	35	A194-2H	35	A194-2H
10	阀盖Bonnet	WCB	A216-WCB	WCB	A216-WCB
11	上密封座Back seat	1Cr13	A276-410	1Cr18Ni9	A276-304
12	填料 Packing	柔性石墨Graphite	柔性石墨Graphite	柔性石墨Graphite	柔性石墨Graphite
13	填料压套 Packing sleeve	2Cr13	A276-420	2Cr13	A276-420
14	填料压盖 Gland Packing	WCB	A276-WCB	WCB	A276-WCB
15	支架Yoke	WCB	A216-WCB	WCB	A216-WCB
16	阀杆螺母Stem nut	ZQA19-4	C95500	ZQA19-4	C95500
17	压盖Gland	25	A105	25	A105
18	手轮 Hand wheel	QT400-17	A536-60-40-18	QT400-17	A536-60-40-18
19	指示罩 Indicating cover	25	A105	25	A105

注:阀门主要零部件材质可根据实际工况条件或用户特殊要求设计选用。
Notes: The major parts of the valves can be designed and selected according to actual work condition or customers' specific requirement.

Double-disc Parallel Gate Valve
双闸板平板闸阀



产品采用标准 Technical Specification

设计依据 Design reference		GB	API
设计标准 Design standard		JB/T5298 GB/T19672	API 6D ASME B 16.34
结构长度 Structural length	法兰 Flanged	GB/T 12221 GB/T19672,JB/T 5298	API 6D ASME B 16.10
	焊接 Weided connection	GB/T15188.1 GB/T19672	
连接法兰 Flange ends		GB/T9113 GB/T 79	ASME B 16.5 MSS SP44
对焊端 Butt-weldingends		GB/T 12224	ASME B 16.25
试验和检验 Teat & inspection		GB/T 9092	API 6D API 598

注:阀门连接法兰尺寸可根据要求设计制造。
Note: The sizes of valve connecting flange can be designed according to customers'requirement.

主要零件材料 Main Parts Material

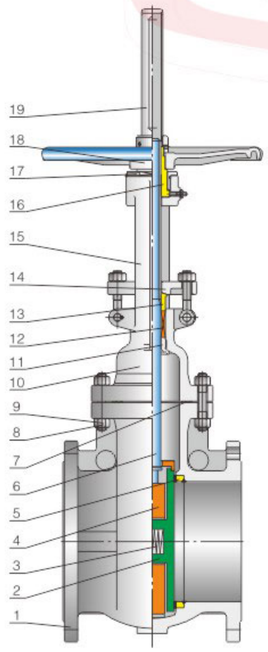

序号 No.	零件名称 Part name	材料 Materia			
		普通型 Ordinary type		抗硫型 Antisulphur type	
		GB	ASTM	GB	ASTM
1	阀体Body	WCB	A216-WCB	WCB	A216-WCB
2	闸板架Disc frame	WCB	A216-WCB	WCB	A216-WCB
3	弹簧Spring	inconel x-750	inconel x-750	inconel x-750	inconel x-750
4	闸板Disc	25+STL	A105+STL	1Cr18Ni9+STL	A276-304+STL
5	阀座Seat	25+STL	A105+STL	1Cr18Ni9+STL	A276-304+STL
6	阀杆Stem	2Cr13	A276-410	1Cr18Ni9	A276-304
7	垫片Gasket	柔性石墨Graphite +1Cr18Ni9	柔性石墨Graphite +1Cr18Ni9	柔性石墨Graphite +1Cr18Ni9	柔性石墨Graphite +1Cr18Ni9
8	螺柱Stud	35CrMoA	A193-B7	35CrMoA	A193-B7
9	螺母Nut	35	A194-2H	35	A194-2H
10	阀盖Bonnet	WCB	A216-WCB	WCB	A216-WCB
11	上密封座Back seat	1Cr13	A276-410	1Cr18Ni9	A276-304
12	填料 Packing	柔性石墨Graphite	柔性石墨Graphite	柔性石墨Graphite	柔性石墨Graphite
13	填料压套 Packing sleeve	2Cr13	A276-420	2Cr13	A276-420
14	填料压盖 Gland Packing	WCB	A276-WCB	WCB	A276-WCB
15	支架Yoke	WCB	A216-WCB	WCB	A216-WCB
16	阀杆螺母Stem nut	ZQA19-4	C95500	ZQA19-4	C95500
17	压盖Gland	25	A105	25	A105
18	手轮 Hand wheel	QT400-17	A536-60-40-18	QT400-17	A536-60-40-18
19	指示罩 Indicating cover	25	A105	25	A105

注:阀门主要零部件材质可根据实际工况条件或用户特殊要求设计选用。
Notes: The major parts of the valves can be designed and selected according to actual work condition or customers' specific requirement.

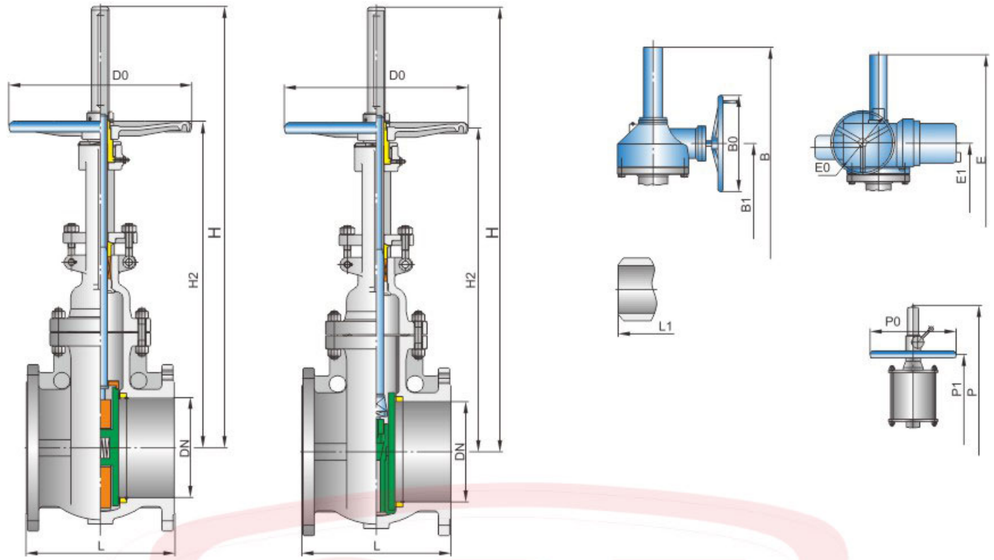

双闸板平板闸阀
Double-Disc Parallel Gate Valve

自动补偿平衡式双平板闸阀
Auto Compensation
Balanced Double ParallelGate Valve

主要外形尺寸 Main Size of Outside

型号Model:(K)Z5(6,9)4(6)4W(F,Y,D)PN1.6,2.5MPa PN2.0MPa(Class150)

DN (mm)	NPS (in)	法兰 Flange		对焊 Butt welding	手动 Hand-operated			齿动 Geared driving			齿动装置 Geared driving	气动液动 Air-operating and Fluid driving			电动 Electric driving device			电动装置 Electric driving device
		GB	API	L1	H	H2	D0	B	B1	B0		P	P1	P0	E	E1	E0	
50	2	250	178	216	475	360	250	-	-	-	-	-	-	-	690	572	200	SMC-04
65	2 1/2	280	190	241	535	425	300	-	-	-	-	-	-	-	747	637	200	SMC-04
80	3	310	203	283	600	400	300	-	-	-	-	1075	820	250	812	672	200	SMC-04
100	4	350	229	305	700	535	350	-	-	-	-	1240	945	250	960	795	508	SMC-03
150	6	450	267	403	910	685	350	-	-	-	-	1400	1065	300	1170	945	508	SMC-03
200	8	550	292	419	1095	815	350	1235	900	310	BA-0	1595	1210	300	1355	1075	508	SMC-03
250	10	650	330	457	1370	965	450	1510	1050	310	BA-0	1800	1370	350	1630	1095	305	SMC-00
300	12	750	356	502	1470	1100	500	1610	1185	310	BA-0	2090	1590	350	1730	1230	305	SMC-00
350	14	850	381	572	1730	1250	600	1890	1345	460	BA-1	2420	1845	350	2020	1417	305	SMC-00
400	16	950	406	610	1870	1375	650	2030	1470	460	BA-1	2615	1995	400	2160	1532	305	SMC-00
450	18	1050	432	660	2185	1485	700	2415	1625	460	BA-2	2895	2205	500	2500	1651	305	SMC-1
500	20	1150	457	711	2335	1575	800	2565	1715	460	BA-2	3160	2405	600	2650	1741	305	SMC-1
600	24	1350	508	813	2815	1995	1000	3045	2135	460	BA-2	3885	2955	650	3130	2161	457	SMC-2
700	28	1450	610	914	-	-	-	-	-	-	-	4065	3090	700	3630	2470	457	SMC-2
800	32	1650	660	965	-	-	-	-	-	-	-	-	-	-	4135	2933	610	SMC-3
900	36	1880	813	1016	-	-	-	-	-	-	-	-	-	-	4605	3260	610	SMC-3

Auto Compensation Balanced Double Parallel Gate Valve
自动补偿平衡式双平板闸阀

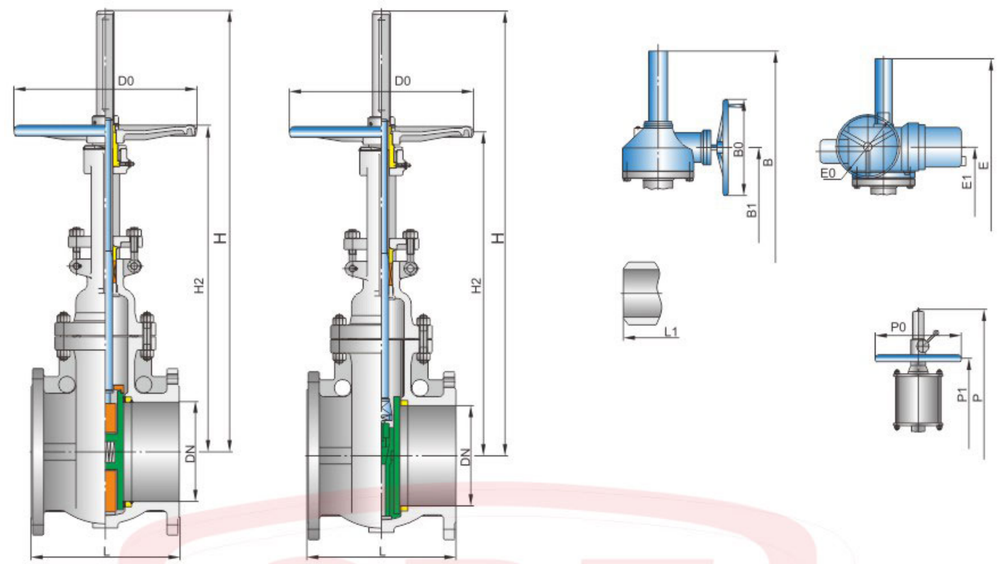

双闸板平板闸阀
Double-Disc Parallel Gate Valve

自动补偿平衡式双平板闸阀
Auto Compensation
Balanced Double ParallelGate Valve

主要外形尺寸 Main Size of Outside

型号Model:(K)Z5(6,9)4(6)4W(F,Y,D) PN4.05MPa PN5.0MPa(Class300)

DN (mm)	NPS (in)	法兰 Flange		对焊 Butt welding	手动 Hand-operated			齿动 Geared driving			齿动装置 Geared driving	气动液动 Air-operating and Fluid driving			电动 Electric driving device			电动装置 Electric driving device
		GB	API	L1	H	H2	D0	B	B1	B0		P	P1	P0	E	E1	E0	
50	2	250	216	216	475	360	250	-	-	-	-	-	-	-	690	572	200	SMC-04
65	2 1/2	280	241	241	535	425	300	-	-	-	-	-	-	-	747	637	200	SMC-04
80	3	310	283	283	600	460	300	-	-	-	-	1075	820	250	860	720	500	SMC-03
100	4	350	305	305	700	535	350	-	-	-	-	1240	945	250	960	795	500	SMC-03
150	6	450	403	403	910	685	350	-	-	-	-	1400	1065	300	1170	945	500	SMC-03
200	8	550	419	419	1095	815	350	1235	900	310	BA-0	1595	1210	300	1355	945	305	SMC-00
250	10	650	457	457	1370	965	450	1510	1050	310	BA-0	1800	1370	350	1630	1095	305	SMC-00
300	12	750	502	502	1470	1100	500	1610	1185	310	BA-0	2090	1590	350	1760	1254	305	SMC-0
350	14	850	762	762	1730	1250	600	1890	1345	460	BA-1	2420	1845	350	2020	1407	305	SMC-0
400	16	950	838	838	1870	1375	650	2030	1470	460	BA-1	2615	1995	400	2185	1541	305	SMC-1
450	18	1050	914	914	2185	1485	700	2415	1625	460	BA-2	2895	2205	500	2500	1651	305	SMC-1
500	20	1150	991	991	2335	1575	800	2565	1715	460	BA-2	3160	2405	600	2695	1757	457	SMC-2
600	24	1350	1143	1143	2815	1995	1000	3045	2135	460	BA-2	3385	2955	650	3175	2177	457	SMC-2
700	28	1450	1346	1346	-	-	-	-	-	-	-	1065	3090	700	3670	2606	610	SMC-3
800	32	1650	1524	1524	-	-	-	-	-	-	-	-	-	-	4136	2933	610	SMC-3
900	36	1880	1727	1727	-	-	-	-	-	-	-	-	-	-	4673	3317	610	SMC-4

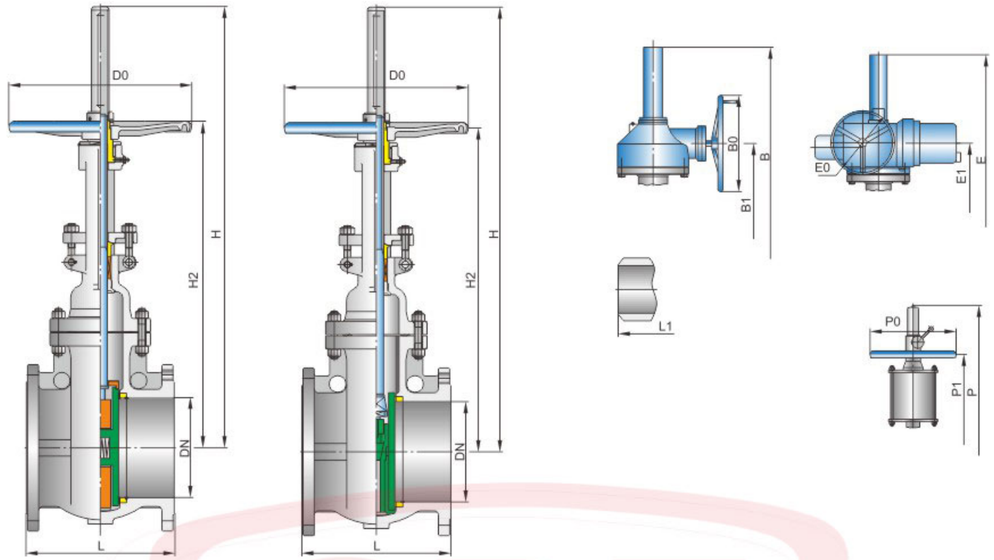

双闸板平板闸阀
Double-Disc Parallel Gate Valve

自动补偿平衡式双平板闸阀
Auto Compensation
Balanced Double ParallelGate Valve

主要外形尺寸 Main Size of Outside

型号Model:(K)Z5(6,9)4(6)4W(F,Y,D) PN6.4MPa

DN (mm)	NPS (in)	法兰 Flange	对焊 Butt welding	手动 Hand-operated			齿动 Geared driving			齿动装置 Geared driving	气动液动 Air-operating and Fluid driving			电动 Electric driving device			电动装置 Electric driving device
		L	L1	H	H2	D0	B	B1	B0		P	P1	P0	E	E1	E0	
50	2	250	292	499	378	250	-	-	-	-	-	-	-	723	601	200	SMC-04
65	21/2	280	330	562	446	300	-	-	-	-	-	-	-	785	670	200	SMC-04
80	3	310	356	630	483	300	-	-	-	-	1130	861	250	902	756	508	SMC-03
100	4	350	406	735	562	350	-	-	-	-	1302	992	250	1007	838	508	SMC-03
150	6	450	495	956	720	350	1096	805	305	BA-0	1470	1118	300	1216	848	305	SMC-00
200	8	550	597	1150	856	400	1290	941	305	BA-0	1675	1274	300	1440	1013	305	SMC-0
250	10	650	673	1439	1013	500	1580	1098	304	BA-0	1890	1440	350	1728	1170	305	SMC-0
300	12	750	762	1545	1155	600	1705	1250	458	BA-1	2195	1670	350	1833	1314	305	SMC-0
350	14	850	826	1817	1313	650	1977	1408	458	BA-1	2542	1937	350	2131	1480	305	SMC-1
400	16	950	902	1965	1445	700	2125	1540	458	BA-1	2746	2095	400	2278	1610	305	SMC-1
450	18	1050	978	2295	1560	800	2525	1700	458	BA-2	3040	2315	500	2655	1741	457	SMC-2
500	20	1150	1054	2452	1655	1000	2682	1795	458	BA-2	3318	2525	600	2812	1836	610	SMC-3
600	24	1350	1232	-	-	-	3196	2235	458	BA-2	4080	3103	650	3356	2413	610	SMC-3
700	28	1450	1397	-	-	-	-	-	-	-	4268	3245	700	3902	2777	610	SMC-4
800	32	1650	1651	-	-	-	-	-	-	-	-	-	-	4393	3121	610	SMC-4
900	36	1880	1880	-	-	-	-	-	-	-	-	-	-	4863	3428	760	SMC-5

Auto Compensation Balanced Double Parallel Gate Valve
自动补偿平衡式双平板闸阀

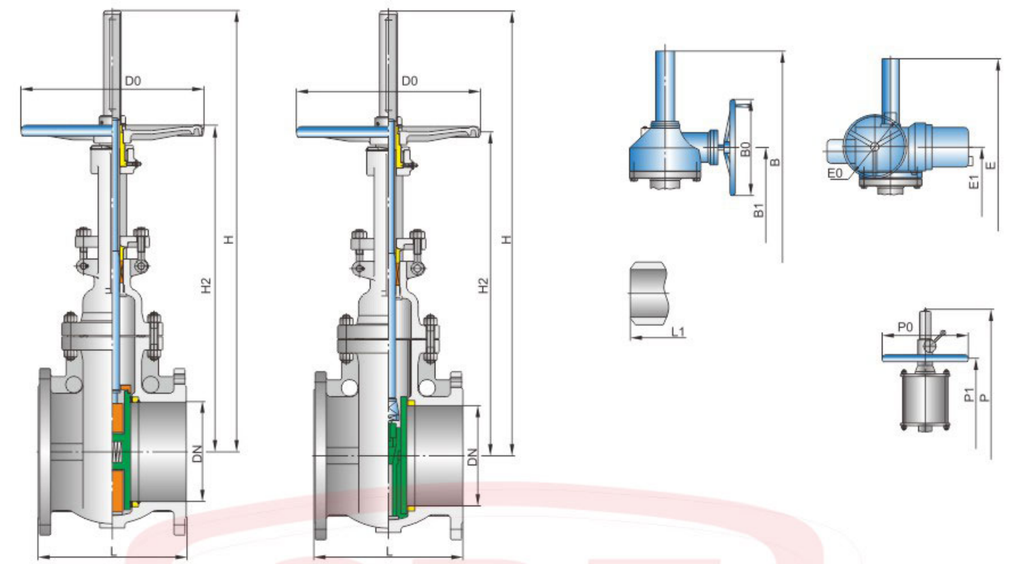

双闸板平板闸阀
Double-Disc Parallel Gate Valve

自动补偿平衡式双平板闸阀
Auto Compensation
Balanced Double ParallelGate Valve

主要外形尺寸 Main Size of Outside

型号Model:(K)Z5(6,9)4(6)4W(F,Y,D) Class300

DN (mm)	NPS (in)	法兰 Flange	对焊 Butt welding	手动 Hand-operated			齿动 Geared driving			齿动装置 Geared driving	气动液动 Air-operating and Fluid driving			电动 Electric driving device			电动装置 Electric driving device
		L	L1	H	H2	D0	B	B1	B0		P	P1	P0	E	E1	E0	
50	2	292	292	499	378	250	-	-	-	-	-	-	-	723	601	200	SMC-04
65	21/2	330	330	562	446	300	-	-	-	-	-	-	-	785	670	200	SMC-04
80	3	356	356	630	483	300	-	-	-	-	1130	861	250	902	756	508	SMC-03
100	4	406	406	735	562	350	-	-	-	-	1302	992	250	1007	838	508	SMC-03
150	6	495	495	956	720	350	1096	805	305	BA-0	1470	1118	300	1216	848	305	SMC-00
200	8	597	597	1150	856	400	1290	941	305	BA-0	1675	1274	300	1440	1013	305	SMC-0
250	10	673	673	1439	1013	500	1580	1098	304	BA-0	1890	1440	350	1728	1170	305	SMC-0
300	12	762	762	1545	1155	600	1705	1250	458	BA-1	2195	1670	350	1833	1314	305	SMC-0
350	14	826	826	1817	1313	650	1977	1408	458	BA-1	2542	1937	350	2131	1480	305	SMC-1
400	16	902	902	1965	1445	700	2125	1540	458	BA-1	2746	2095	400	2278	1610	305	SMC-1
450	18	978	978	2295	1560	800	2525	1700	458	BA-2	3040	2315	500	2655	1741	457	SMC-2
500	20	1054	1054	2452	1655	1000	2682	1795	458	BA-2	3318	2525	600	2812	1836	610	SMC-3
600	24	1232	1232	-	-	-	3186	2235	458	BA-2	4080	3103	650	3356	2413	610	SMC-3
700	28	1397	1397	-	-	-	-	-	-	-	4268	3245	700	3902	2777	610	SMC-4
800	32	1650	1651	-	-	-	-	-	-	-	-	-	-	4393	3121	610	SMC-4
900	36	1880	1880	-	-	-	-	-	-	-	-	-	-	4863	3428	760	SMC-5

Auto Compensation Balanced Double Parallel Gate Valve
自动补偿平衡式双平板闸阀

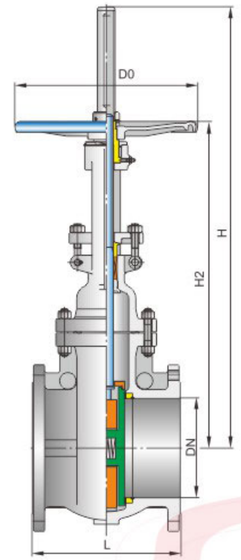

双闸板平板闸阀
Double-Disc Parallel Gate Valve

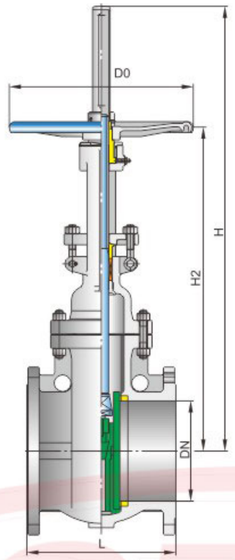

自动补偿平衡式双平板闸阀
Auto Compensation
Balanced Double ParallelGate Valve

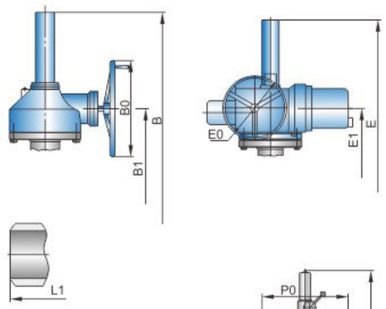

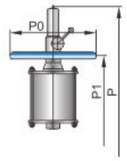

主要外形尺寸 Main Size of Outside

型号Model:(K)Z5(6,9)4(6)4W(F,Y,D) PN10.0MPa(Class600)

DN (mm)	NPS (in)	法兰 Flange	对焊 Butt welding	手动 Hand-operated			齿动 Geared driving			齿动装置 Geared driving	气动液动 Air-operating and Fluid driving			电动 Electric driving device			电动装置 Electric driving device
		L	L1	H	H2	D0	B	B1	B0		P	P1	P0	E	E1	E0	
50	2	292	292	499	378	300	-	-	-	-	-	-	-	723	600	200	SMC-04
65	2 1/2	330	330	562	446	350	-	-	-	-	-	-	-	821	705	508	SMC-03
80	3	356	356	630	483	350	-	-	-	-	1130	861	250	890	742	508	SMC-03
100	4	432	432	735	562	400	-	-	-	-	1302	992	250	995	690	305	SMC-00
150	6	559	559	956	720	500	1096	805	305	BA-0	1470	1118	300	1245	876	305	SMC-0
200	8	660	660	1150	856	600	1290	941	305	BA-0	1675	1271	300	1440	1013	305	SMC-0
250	10	787	787	1439	1013	650	1580	1098	458	BA-1	1890	1440	350	1753	1199	305	SMC-1
300	12	838	838	1545	1155	700	1705	1250	458	BA-1	2195	1670	350	1858	1321	305	SMC-1
350	14	889	889	1817	1313	800	1977	1408	458	BA-1	2542	1937	350	2177	1495	457	SMC-2
400	16	991	991	1965	1445	1000	2125	1540	458	BA-2	2746	2095	400	2395	1762	610	SMC-3
450	18	1092	1092	-	-	-	2525	1700	458	BA-2	3040	2315	500	2695	1877	610	SMC-3
500	20	1194	1194	-	-	-	2682	1795	458	BA-2	3315	2525	600	2922	2030	610	SMC-4
600	24	1397	1397	-	-	-	-	-	-	-	4080	3103	650	3426	2470	610	SMC-4
700	28	1549	1549	-	-	-	-	-	-	-	4268	3245	700	3983	2835	760	SMC-5
800	32	1778	1778	-	-	-	-	-	-	-	-	-	-	4485	3186	760	SMC-5

API Gate Valve
API闸阀

Z40H-CL150/CL300/CL600 Z41H-CL900/CL1500/CL2500

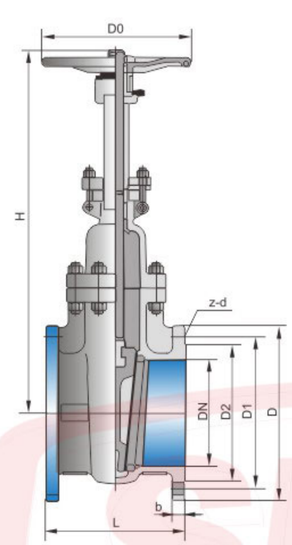

ANSI-150LB

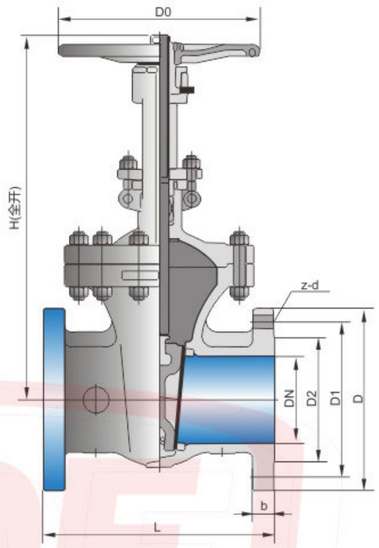

ANSI-300LB, 600LB, 900LB, 1500LB, 2500LB

制造验收技术标准　Manufacturing Acceptance Technical Standards

设计标准按API 600　　Design Criteria Press API 600
结构长度按API B16.10　　Structure length by API B16.10
法兰标准按API B16.5　　Flange Standard Press API B16.5
试验标准按API 598　　Test standard according to API 598

主要性能规范　Main Performance Specifications

试验压力 test pressure	150(LB)	300(LB)	600(LB)	900(LB)	1500(LB)	2500(LB)	适用温度(°C) Applicable Temp	适用介质 Applicable media
壳体强度试验 Shell strength test	3	7.8	15.4	23.1	38.4	64.6	水、蒸汽、油品 Water, steam, oil	≤425°C
密封试验(液) Seal test (hydraulic)	2.2	5.6	11.2	16.8	28.1	47.7		
密封试验(气) Seal test (pneumatic)	0.5-0.7							

主要零件材料　Material Formain Parts

阀体材料 Body material	WCB(C)	CF8(P)	CF8M(R)	WC6, WC9(V)	CF3(P)	CF3M(R)
工作温度(°C) working temp	≤425	≤275	≤275	≤550	≤200	≤200
适用介质 Applicable media	水、蒸汽、油品 Water, steam, oil	硝酸类 HNO3	醋酸类 acetic acid	水、蒸汽 water, steam	醋酸类 acetic acid	醋酸类 acetic acid

注：如有产品参数疑问请致电上海电站阀门有限公司详询，电话：021-59222288
Note: If the product parameters, please call our company detailed inquiry, Tel: 021-59222288

Z40H-CL150/CL300/CL600 Z41H-CL900/CL1500/CL2500

主要外形尺寸和连接尺寸 Main Dimensions and Connection Dimensions

公称通径NPS		单位 unit	L	H(全开) H(Fully open)	D	D1	D2	b	z-d	D0
in	mm									
Z40H-CL150										
2"	50	in	7.00	16.10	6.00	4.75	3.62	0.75	4-0.75	8.00
		mm	178	409	152	120.5	92	19.1	4-19	200
3"	80	in	8.00	20.00	7.5	6.00	5.00	0.94	4-0.75	10.00
		mm	203	570	190	152.5	127	23.9	4-19	250
4"	100	in	9.00	23.20	9.00	7.50	6.19	0.94	8-0.75	10.00
		mm	229	590	229	190.5	157	23.9	8-19	250
6"	150	in	10.50	24.80	11.00	9.50	8.50	1.00	8-0.88	12.00
		mm	267	630	279	241.5	216	25.4	8-22	300
8"	200	in	11.50	37.80	13.50	11.75	10.62	1.12	8-0.88	13.88
		mm	292	960	343	298.5	270	28.5	8-22	350
10"	250	in	13.00	45.6	16.00	14.25	12.75	1.19	12-1.00	15.70
		mm	330	1158	406	362	324	30.2	12-25	400
12"	300	in	14.00	54.30	19.00	17.00	15.00	1.25	12-1.00	17.70
		mm	356	1378	483	432	381	31.8	12-25	450
14"	350	in	15.00	60.75	21.00	18.75	16.25	1.38	12-1.12	19.7
		mm	381	1543	533	476.5	413	35	12-29	500
16"	400	in	16.00	68.40	23.50	21.25	18.50	1.44	16-1.12	23.60
		mm	406	1738	597	539.5	47	36.6	16-29	600
18"	450	in	17.00	71.10	25.00	22.75	21.00	1.56	16-1.25	23.60
		mm	432	1959	635	578	533	39.7	16-32	600
20"	500	in	18.00	87.20	27.5	25.00	23.00	1.69	20-1.25	26.80
		mm	457	2214	698	635	584	42.9	20-32	680
24"	600	in	20.00	102.3	32.00	29.50	27.25	1.88	20-1.38	29.90
		mm	508	2599	813	749.5	692	47.7	20-35	760
30"	750	in	24.00	125.3	38.75	36.00	33.75	2.94	28-1.38	36.00
		mm	610	3183	985	914	857	74.5	28-35	915
36"	900	in	28.00	147.00	46.00	42.75	40.25	3.56	32-1.62	36.00
		mm	711	3737	1170	1086	1022	90.5	32-41	915
Z40H-CL300										
2"	50	in	8.5	16.7	6.50	5.00	3.62	0.88	8-0.75	8.0
		mm	216	424	165	127	92	22.3	8-19	200
3"	80	in	11.15	21.00	8.25	6.62	5.0	1.12	8-0.88	10
		mm	283	535	210	168	127	28.5	8-22	250
4"	100	in	12.00	24.20	10.0	7.88	6.19	1.25	8-0.88	10
		mm	305	615	254	200	157.2	31.8	8-22	250
6"	150	in	15.87	31.30	12.50	10.62	8.5	1.44	12-0.88	14
		mm	403	795	318	270	216	36.6	12-22	350
8"	200	in	16.50	39.90	15.0	13.0	10.62	1.62	12-1.0	15.7
		mm	419	1012	381	330	270	41.3	12-25	400
10"	250	in	18.00	48.50	17.50	15.52	12.75	1.88	16-1.12	17.7
		mm	457	1231	444	387.5	324	47.7	16-29	450
12"	300	in	19.75	57.0	20.50	17.75	15.0	2.00	16-1.25	19.7
		mm	502	1450	521	451	381	50.8	16-32	500
14"	350	in	30.00	64.80	23.00	20.25	16.25	2.12	20-1.25	23.6
		mm	762	1645	584	514.5	413	54.0	20-32	600
16"	400	in	33.00	72.50	25.50	20.25	18.5	2.25	20-1.38	23.6
		mm	838	1841	648	571.5	470	57.2	20-35	600
18"	450	in	36.00	76.50	28.00	24.75	21	2.38	24-1.38	26.8
		mm	914	1943	711	628.5	533	60.4	24-35	680
20"	500	in	39.00	84.80	30.50	27.0	23.0	2.50	24-1.38	38
		mm	991	2154	775	686	584	63.5	24-35	760
24"	600	in	45.00	100.50	36.0	32.0	27.25	2.75	24-1.62	36
		mm	1143	2553	914	813	692	69.9	24-41	915

API Gate Valve
API闸阀

Z40H-CL150/CL300/CL600 Z41H-CL900/CL1500/CL2500

主要外形尺寸和连接尺寸 Main Dimensions and Connection Dimensions

公称通径NPS		单位 unit	L	H(全开) H(Fully open)	D	D1	D2	b	z-d	D0
in	mm									
Z40H-CL600										
2"	50	in	11.50	18	6.5	5.00	3.62	1.0	8-0.75	10
		mm	292	458	165	127	92	25.4	8-19	250
3"	80	in	14.00	22.58	8.25	6.62	5.00	1.25	8-0.88	10
		mm	356	570	210	168	127	31.8	8-22	250
4"	100	in	17.00	27.2	10.75	8.50	6.19	1.5	8-1.0	14
		mm	432	690	273	216	157	38.1	8-25	350
6"	150	in	22	35.8	14	11.50	8.50	1.88	12-1.12	18
		mm	559	910	356	292	216	47.7	12-29	450
8"	200	in	26.00	41.9	16.5	13.75	10.62	201.9	12-1.25	19.7
		mm	600	1064	419	349	270	55.6	12-32	500
10"	250	in	31.00	49.5	20	17.00	12.75	2.5	16-1.38	23.6
		mm	787	1257	508	432	324	63.5	16-35	600
12"	300	in	33	57.8	22	19.25	15.00	2.62	20-1.38	26.8
		mm	838	1468	559	489	381	66.7	20-35	680
14"	350	in	35	63.9	23.75	20.75	16.25	2.75	20-1.50	26.9
		mm	889	1623	603	527	413	69.9	20-38	760
16"	400	in	39	71.5	27	23.75	18.5	3.0	20-1.62	26.9
		mm	991	1816	686	603	470	76.2	20-41	760
18"	450	in	43	82.7	29.25	25.75	21.00	3.25	20-10.75	36
		mm	1092	2100	743	654	533	82.6	20-45	915
20"	500	in	47	88.6	32	28.5	23.00	3.5	24-1.75	37.4
		mm	1194	2250	813	724	584	88.9	24-45	950
24"	600	in	55	107.5	37	33.0	27.25	4.0	24-2.0	39.4
		mm	1397	2730	940	838	692	102	24-51	1000

主要外形尺寸和连接尺寸 Main Dimensions and Connection Dimensions

公称通径NPS		L	D	D1	D2	b	z-Φd	H	D0
mm	in								
Z41H-CL900									
50	2	368	216	165.1	92	46	8-Φ26	523	250
65	2 1/2	419	244	190.5	105	49	8-Φ29	635	250
80	3	381	241	190.5	127	46	8-Φ26	620	300
100	4	457	292	234.9	157	52	8-Φ32	688	350
150	6	610	381	317.5	216	63	12-Φ32	916	500
200	8	737	470	393.7	270	71	12-Φ39	1107	600
250	10	838	545	469.9	324	77	16-Φ39	1313	680
300	12	965	610	533.4	381	87	20-Φ39	1528	760
350	14	1029	640	559	413	93	20-Φ42	2216	864

注：如有产品参数疑问请致电上海电站阀门有限公司详询，电话：021-59222288
Note: If the product parameters, please call our company detailed inquiry, Tel: 021-59222288

API Gate Valve
API闸阀

Z40H-CL150/CL300/CL600　Z41H-CL900/CL1500/CL2500

主要外形尺寸和连接尺寸　Main Dimensions and Connection Dimensions

公称通径NPS		L	D	D1	D2	D8	b	z-Φd	H	D0	重量WT(kg)
mm	in										
Z41H-CL900											
50	2	372	216	165.1	124	95.2	46	8-Φ25	521	300	69
65	2 1/2	422	244	190.5	137	108.0	49	8-Φ29	584	350	79
80	3	384	241	190.5	156	123.8	46	8-Φ25	648	350	115
100	4	461	292	235.0	181	149.2	52	8-Φ32	750	400	198
125	5	562	349	279.4	216	181.0	59	8-Φ35	800	500	303
150	6	613	381	317.5	241	211.1	64	12-Φ32	940	600	407
200	8	740	470	393.7	308	269.9	72	12-Φ38	1130	600	725
250	10	842	546	469.9	362	323.8	78	16-Φ38	1340	650	1091
300	12	969	610	533.4	419	381.0	87	20-Φ38	1543	700	1629

主要外形尺寸和连接尺寸　Main Dimensions and Connection Dimensions

公称通径NPS		L	D	D1	D2	b	z-Φd	H~	D0	重量WT(kg)
mm	in									
Z41H-CL1500										
50	2	368	216	165	92	47	8-Φ26	614	254	116
65	2 1/2	419	244	191	105	50	8-Φ29	705	356	166
80	3	470	267	203	127	56	8-Φ32	705	356	209
100	4	546	311	241	157	62	8-Φ35	927	457	296
125	5	673	375	292	186	82	8-Φ42	1120	610	508
150	6	705	394	318	216	93	12-Φ39	1191	610	720
200	8	832	483	394	270	104	12-Φ45	1524	711	1275
250	10	991	585	483	324	120	12-Φ51	1854	864	2092
300	12	1130	675	572	381	139	16-Φ54	2184	864	2951
350	14	1257	750	635	413	150	16-Φ61	2216	864	4382
Z41H-CL2500										
65	2 1/2	330	267	196.3	105	65	8-Φ32	631	350	95
80	3	368	305	228.6	127	74	8-Φ35	735	450	115
100	4	457	356	273.0	157	84	8-Φ42	891	600	215
125	5	533	419	323.8	186	100	8-Φ48	1047	800	310
150	6	610	483	368.3	216	115	8-Φ54	1144	500	580
200	8	761	550	438.1	270	134	12-Φ54	1392	600	900
250	10	914	675	539.7	324	173	12-Φ67	1614	700	1600

注：如有产品参数疑问请致电上海电站阀门有限公司详询，电话：021-59222288
Note: If the product parameters, please call our company detailed inquiry, Tel: 021-59222288

API Cryogenic Gate Valve
API低温闸阀

DZ40Y-CL150/CL300/CL600

执行标准　Implementation Standards

项目 project	设计及制造 Design and manufacture	结构长度 Structure length	法兰标准 Flange standard	检验和试验 Inspection and testing
标准 standard	API600	ANSI B16.10	ANSI B16.15	API598

主要零件材料　Main Parts Material

零件名称 Part name	阀体、阀盖 Body, bonnet	阀板、阀座、阀杆 Disc, seat, stem	填料 Packing	支架 Yoke
材料 material	A352-LCB A352-LC3 A351-CF8	A182-F304	聚四氟乙烯 PTFE	A216-WCB

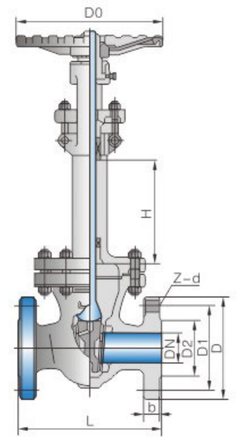

产品性能规范 Products Performance Specification

型号 Model	公称压力 PN(Lb)	常温试验压力P2(MPa) Normal temperature test pressure			低温密封试验压力 (MPa) Low temp seal test pressure	工作温度及适用介质 working temperature and applicable media		
		壳体 shell	密封(气) Seal(gas)	上密封 Back seal test				
DZ40Y-150(Lb)	150	3.0	0.6	2.2	0.6	-46°C 氨/液氨/丙烷 NH3/LN2/C3H8	-101°C 乙烯/二氧化碳 ethylene/CO2	-196°C 甲烷/液化天然气 CH4/LNG
DZ40Y-300(Lb)	300	7.5	0.6	5.5	0.6			
DZ40Y-600(Lb)	600	15	0.6	11	0.6			

主要外形尺寸和连接尺寸　Main Dimensions and Connection Dimensions

公称通径NPS		主要外形尺寸及连接尺寸(mm) Main dimensions and connection dimensions									
in	mm	L	D	D1	D2	b	z-d	D0	H		
									-46°C	-101°C	-196°C
DZ40Y-CL150											
2	50	178	152	120.6	92.1	16	4-19	200	110	130	170
3	80	203	191	152.4	127	19.5	4-19	250	120	150	190
4	100	229	229	190.5	157.2	24	8-19	250	130	160	200
5	125	254	254	215.9	185.7	24	8-22	300	140	170	220
6	150	267	279	241.3	215.9	25.5	8-22	300	140	170	220
8	200	292	342	298.4	269.9	29	8-22	350	140	170	220
10	250	330	406	361.9	323.8	30.5	12-25	400	150	180	240
12	300	356	483	432	381	32	12-25	400	150	180	240
DZ40Y-CL300											
2	50	216	165	127	92.1	22.5	8-19	200	110	130	170
3	80	283	210	168.3	127	29	8-22	250	120	150	190
4	100	305	254	200	157.2	32	8-22	300	130	160	200
5	125	381	279	234.9	185.7	35	8-22	350	140	170	220
6	150	403	318	269.9	215.9	37	12-22	350	140	170	220
8	200	419	381	330.2	269.9	40.5	12-25	400	140	170	220
10	250	457	445	387.5	323.8	48	16-29	450	150	180	240
12	300	502	521	451	381	51	16-32	500	150	180	240
DZ40Y-CL600											
2	50	292	165	127	92.1	25.5	8-19	250	110	130	170
3	60	356	210	166.3	127	32	8-22	250	120	150	100
4	100	432	273	215.9	157.2	38.5	8-25	350	130	160	200
5	125	508	330	266.7	185.7	44.5	8-29	400	140	170	220
6	150	559	356	292.1	215.9	48	12-29	450	140	170	220
8	200	660	419	349.2	269.9	56	14-32	500	140	170	220
10	250	787	510	431.8	323.8	63.5	16-35	600	150	180	240
12	300	838	559	489	381	66.7	20-35	685	150	180	240

JIS Gate Valve[10K\20K]
JIS闸阀



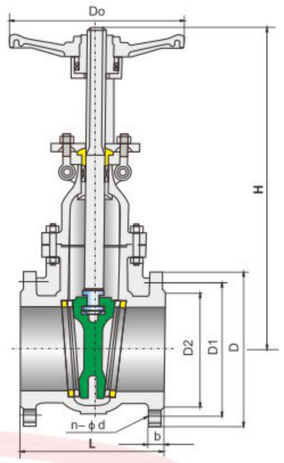

执行标准 Administer Standard

设计与制造	结构长度	法兰尺寸	压力-温度	试验-检验
Design and Manufacture	Face to Face	Flange Dimension	Pressure Temperature Rating	Inspection and Test
JIS B2073 B2083	JIS B2002	JIS B2212 B2214	JIS B2073 B2083	JIS B2003

主要外形尺寸和连接尺寸(mm) Main External and Connecting Dimensions(mm)

明杆 Rod

DN(mm)	NPS(in)	L	H	D0
		10k		
40	1 1/2"	165	250	160
50	2"	178	409	180
65	2 1/2"	190	535	200
80	3"	203	570	200
100	4"	229	590	220
125	5"	254	530.5	280
150	6"	267	630	300
200	8"	292	960	320
250	10"	330	1158	350
300	12"	356	1378	450
350	14"	381	1543	500
400	16"	406	1738	600
450	18"	432	1959	600
500	20"	457	2214	680
		20k		
40	1 1/2"	165	250	160
50	2"	216	480	200
65	2 1/2"	241	510	250
80	3"	283	580	280
100	4"	305	700	350
150	6"	403	940	400
200	8"	419	1190	450
250	10"	457	1390	500
300	12"	502	1600	500
350	14"	762	1750	600
400	16"	838	1900	600
450	18"	914	2320	650

JIS Underground Gate Valve(10K, 20K)
JIS地下闸阀



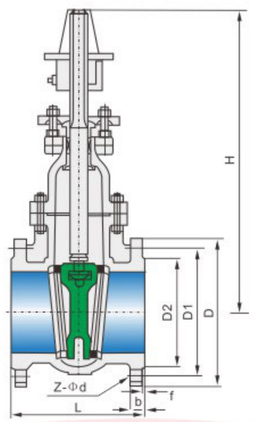

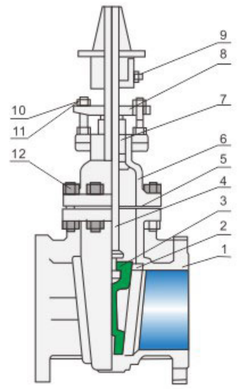

主要零件材料 Main Parts Material

序号No.	零件名称 Accessory name	材料 Material		
1	阀体 Body	A216WCB	SCS13	SCS14
2	阀座填料 Seat	A216WCB	SCS13	SCS14
3	闸板 Disc	A216 WCB	SCS13	SCS14
4	阀杆 Stem	A182-F 304	304SS	304SS
5	垫圈 Gasket	PTPE	PTPE	PTPE
6	阀盖 Cover	A216 WCB	SCS13	SCS14
7	填料 Packing	PTPE	PTPE	PTPE
8	填料压盖 Gland Bush	A216 WCB	SCS13	SCS14
9	阀杆螺母 Stem nut	A194-2H	A194-2H	A194-2H
10	螺栓 Bolts	A193-B7	A193-B8	A193-B8
11	螺母 Nuts	A194-2H	A194-8	A194-8
12	螺栓 Bolts	A193-B7	A193-B8	A193-B8

主要外形尺寸和连接尺寸 Main External and Connecting Dimensions

尺寸 Size	结构长度 Face To Face	法兰 Flange						H
(A)	L	D	D1	D2	b	f	Z-Φd	
80	203	200	160	133	18	2	4-19	400
100	229	220	180	153	18	2	8-19	430
150	267	285	240	209	22	2	8-23	583
200	292	340	295	264	22	2	8-23	655
250	330	395	350	319	24	2	12-23	780
300	356	445	400	367	24	3	12-23	860
350	381	505	445	427	26	3	16-23	
400	406	565	515	477	28	3	16-28	
500	457	670	620	582	30	3	20-28	
600	508	780	725	682	40	3	20-31	
700	610	895	840	797	46	4	24-31	

GB Glove Valve
国标截止阀

J41H-PN1.6, 2.5, 4.0, 6.4, 10.0, 16.0

结构特点与用途:

1. 中法兰式、自密封式多结构满足用户要求。
2. 可以安装在管道的任何位置上，启闭迅速、耐磨耐蚀。
3. 不锈钢截止阀适用于各腐蚀性介质上的管道上，有良好的防腐性和足够的强度。
4. 合金钢截止阀适用于耐高温的蒸汽、油品管道上，具有耐高温的特点。

Structural Features and Uses

1. Middle flange type, self-seal type structures are available to meet the needs of customers.
2. It can be installed at any position of pipelines, with quiok startup/ shutoff, wear-resistant and anticorrosion property.
3. Stainless steel globe valve is app;ied to various pipelines of corrosive medium, with good non-corrosibility and enough intensity.
4. Alloy steel globe valve is applied to fire-resistant pipelines of steam and oil products, with good fire-resistant property.

试验压力 Test Pressure

公称压力PN(MPa)	壳体强度试验压力(MPa) Shell strength test pressure	上密封试验压力(MPa) Back seal test pressure	密封试验压力(MPa) Seal test pressure
1.6	2.4	1.8	1.8
2.5	3.8	2.8	2.8
4.0	6.0	4.4	4.4
6.4	9.6	7.0	7.0
10.0	15	11	11
16.0	24	18	18

适用规范 Applicable Specification

产品类别 Product Category	适用介质 Applicable media	适用温度(°C) Applicable Temp
J41H-C J41Y-C	水、汽、油品 Water, steam,oil	≤425°C
		≤450°C
J41W-P J941W-P	硝酸类 Nitrate class	≤200°C
J41W-R	醋酸类 Acetic acid class	≤200°C
J41Y-I J941Y-I	水、汽、油品 Water, steam,oil	≤550°C

主要零件材料 Material Formain Parts

产品类别 Product Category	零件名称 Part name							
	阀体、阀盖 Body, bonnet	阀杆 stem	阀瓣 Disc	密封面 Sealing surface	阀杆螺母 Stem nut	填料 Packing	紧固件 Fasteners	手轮 Hand wheel
J41H-C型 J41Y-C型 J941H-C型 J941Y-C型	25, WCB	铬不锈钢 Cr.stainless steel	2Crl3, 25	H:合金 Y:钴基硬质合金 H:Alloy Y:Stellite	铝合铜 Aluminum alloy	柔性石墨 Flexible graphite	优质碳钢 HQ Carbon steel	可锻铸铁 Malleable cast iron
J41W-P型 J941W-P型	铬镍钛钢 Cr.Ni.Ti. steel	铬镍钛钢 Cr.Ni.Ti. steel	铬镍钛钢 Cr.Ni.Ti. steel	铬镍钛钢 Cr.Ni.Ti. steel			不锈钢 Stainless steel	
J41W-R型	铬镍钼钛钢 Cr.Ni.Mo.Ti steel	铬镍钼钛钢 Cr.Ni.Mo.Ti steel	铬镍钼钛钢 Cr.Ni.Mo.Ti steel	铬镍钼钛钢 Cr.Ni.Mo.Ti steel			不锈钢 Stainless steel	
J41Y-I型 J941Y-I型	铬钼钢 Cr.Mo steel	铬钼钢 Cr.Mo steel	合金钢 Alloy steel	钴基硬质合金钢 Stellite			合金钢 Alloy steel	

GB Glove Valve
国标截止阀

J41H-PN1.6, 2.5, 4.0, 6.4, 10.0, 16.0

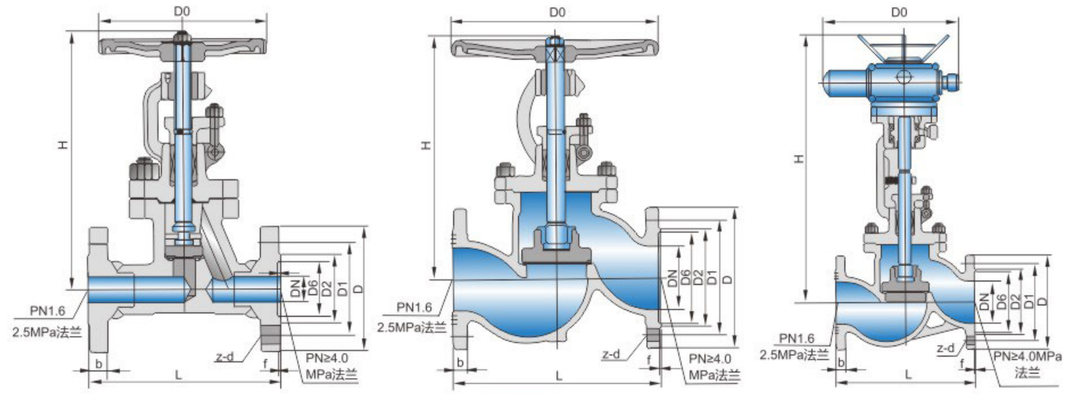

主要外形尺寸和连接尺寸 Main Dimensions and Connection Dimensions

公称通径DN(mm)	L	D	D1	D2	b	f	Z-d	H	D0	重量WT(kg)
	J41H-16C J41Y-16C J41W-16P J41W-16R J41Y-16I									
10	130	90	60	40	14	2	4-14	198	120	4.7
15	130	95	65	45	16	2	4-14	218	120	5.2
20	150	105	75	55	16	2	4-14	258	140	7.1
25	160	115	85	65	16	2	4-14	275	160	7.4
32	180	135	100	78	18	2	4-18	280	180	8.5
40	200	145	110	85	18	3	4-18	330	200	12.5
50	230	160	125	100	18	3	4-18	350	240	20
65	290	180	145	120	18	3	4-18	400	280	25
80	310	195	160	135	20	3	8-18	355	280	35
100	350	215	180	155	22	3	8-18	415	320	50
125	400	245	210	185	24	3	8-18	460	360	75
150	480	280	240	210	24	3	8-23	510	400	100
200	600	335	295	265	26	3	12-23	710	400	180
250	650	405	355	320	30	3	12-23	786	450	440
300	750	460	410	375	30	3	12-23	925	500	648

注：如有产品参数疑问请致电上海电站阀门有限公司详询，电话：021-59222288

Note: If the product parameters, please call our company detailed inquiry, Tel: 021-59222288

J41H-PN1.6, 2.5, 4.0, 6.4, 10.0, 16.0

主要外形尺寸和连接尺寸 Main Dimensions and Connection Dimensions

公称通径 DN	L	D	D1	D2	b	f	Z-d	H手 handle	H电 Electric Actuators	D0	电动装置 Electric device	重量WT(kg)	
												手动 Manual	电动 electric
	J41H-25	J41Y-25	J41W-25P	J41W-25R	J41Y-25I	J941H-25	J941Y-25	J941W-25P	J941W-25R	J941Y-25I			
10	130	90	60	40	16	2	4-14	198	-	120	-	4.9	-
15	130	95	65	45	16	2	4-14	218	-	120	-	5.4	-
20	150	105	75	55	16	2	4-14	258	-	140	-	7	-
25	160	115	85	65	16	2	4-14	275	-	160	-	7.4	-
32	180	135	100	78	18	2	4-18	280	-	180	-	8.5	-
40	200	145	110	85	18	3	4-18	330	-	200	-	12.5	-
50	230	160	125	100	20	3	4-18	350	645	240	DZW10I	20	50
65	290	180	145	120	22	3	8-18	400	690	280	DZW10I	35	62
80	310	195	160	135	22	3	8-18	355	715	280	DZW15I	52	67
100	350	230	190	160	24	3	8-23	415	770	320	DZW20	89	73
125	400	270	220	188	28	3	8-25	460	780	360	DZW30	105	127
150	480	300	250	218	30	3	8-25	510	875	400	DZW45	180	215
200	600	360	310	278	34	3	12-25	710	967	400	DZW60	446	322
250	650	425	370	332	36	3	12-30	786	-	450	-	654	-
300	750	485	430	390	40	4	12-30	952	-	500	-		-

主要外形尺寸和连接尺寸 Main Dimensions and Connection Dimensions

公称通径 DN	L	D	D1	D2	D6	b	f	f2	Z-d	H手 handle	H电 Electric Actuators	D0	电动装置 Electric device	重量WT(kg)	
														手动 Manual	电动 electric
	J41H-40	J41Y-40	J41W-40P	J41W-40R	J41Y-40I	J941H-40	J941Y-40	J941W-40P	J941W-40R	J941Y-40I					
10	130	90	60	40	35	16	2	4	4-14	198	-	120	-	4.9	-
15	130	95	65	45	40	16	2	4	4-14	233	-	120	-	5.7	-
20	150	105	75	55	51	16	2	4	4-14	275	-	140	-	7	-
25	160	115	85	65	58	16	2	4	4-14	285	-	160	-	8.8	-
32	180	135	100	78	66	18	2	4	4-18	302	-	180	-	11.8	-
40	200	145	110	85	76	18	3	4	4-18	355	-	200	-	16.5	-
50	230	160	125	100	88	20	3	4	4-18	373	645	240	DZW10I	24	61
65	290	180	145	120	110	22	3	4	8-18	408	690	280	DZW10I	33	75
80	310	195	160	135	121	22	3	4	8-18	436	715	320	DZW20I	44	84
100	350	230	190	160	150	24	3	4.5	8-23	480	770	360	DZW30I	60	101
125	400	270	220	188	176	28	3	4.5	8-25	558	782	400	DZW45	92	207
150	480	300	250	218	204	30	3	4.5	8-25	611	875	400	DZW60	108	226
200	600	375	320	282	260	38	3	4.5	12-30	720	1160	400	DZW90I	190	339

注：如有产品参数疑问请致电上海电站阀门有限公司详询，电话：021-59222288
Note: If the product parameters, please call our company detailed inquiry, Tel: 021-59222288

GB Glove Valve
国标截止阀

J41H-PN1.6, 2.5, 4.0, 6.4, 10.0, 16.0

主要外形尺寸和连接尺寸 Main Dimensions and Connection Dimensions

公称通径 DN	L	D	D1	D2	D6	b	f	f2	Z-d	H手 handle	H电 Electric Actuators	D0	电动装置 Electric device	重量WT(kg)	
														手动 Manual	电动 electric
	J41H-64	J41Y-64	J941H-64	J941Y-64	J41Y-64I	J941Y-64I									
10	170	100	70	50	35	18	2	4	4-14	198		120		5.7	
15	170	105	75	55	41	18	2	4	4-14	195		140		10	
20	190	125	90	68	51	20	2	4	4-18	228		160		13	
25	210	135	100	78	58	22	2	4	4-18	275		180		14.5	
32	230	150	110	82	66	24	2	4	4-23	325		200		19	
40	260	165	125	95	76	24	3	4	4-23	360		240		25	
50	300	175	135	105	88	26	3	4	8-23	410	710	280	DZW10	35	64
65	340	200	160	130	110	28	3	4	8-23	450	750	320	DZW15	48	77
80	380	210	170	140	121	30	3	4	8-23	485	785	360	DZW30	56	86
100	430	250	200	168	150	32	3	4	8-25	537	837	400	DZW45	125	171
125	500	295	240	202	176	36	3	4	8-30	631		400		131	
150	550	340	280	240	204	38	3	4	8-34	646		450		157	
200	650	405	345	300	260	44	3	4	12-34	813		500		283	
	J41H-100	J41Y-100	J941H-100	J941Y-100	J41Y-100I	J941Y-100I									
10	170	100	70	50	35	20	2	4	4-14	198		120		6	
15	170	105	75	55	40	20	2	4	4-14	202		140		11	
20	190	125	90	68	51	22	2	4	4-18	228		160		13.2	
25	210	135	100	78	58	24	2	4	4-18	250		180		14	
32	230	150	110	82	66	24	2	4	4-23	326		220		15	
40	260	165	125	95	76	26	3	4	4-23	359		240		29	
50	300	195	145	112	88	28	3	4	4-25	414	710	280	DZW15	49	82
65	340	220	170	138	110	32	3	4	8-25	434	750	320	DZW20I	65	104
80	380	230	180	148	121	34	3	4	8-25	547	785	400	DZW30	95	138
100	430	265	210	172	150	38	3	4.5	8-30	621	837	450	DZW45	115	243
125	500	310	250	210	176	42	3	4.5	8-34	732		450		149	
150	550	350	290	250	204	46	3	4.5	12-34	840		500		310	
200	650	430	360	312	260	54	3	4.5	12-41	925		550		590	
	J41H-160	J41Y-160													
15	170	110	75	52	40	24	2	4	4-18	148		140		12.2	
20	190	130	90	62	51	26	2	4	4-23	156		160		15	
25	210	140	100	72	58	28	2	4	4-23	125		180		17	
32	230	165	115	85	66	30	2	4	4-25	200		200		21.4	
40	260	175	125	92	76	32	3	4	4-27	231		240		32	
50	300	215	165	132	88	36	3	4	8-25	262		250		52	
65	340	245	190	152	110	44	3	4	8-30	303		320		69	
80	380	260	205	168	121	46	3	4	8-30	341		400		98	
100	430	300	240	200	150	48	3	4.5	8-34	485		450		119	

注：如有产品参数疑问请致电上海电站阀门有限公司详询，电话：021-59222288
Note: If the product parameters, please call our company detailed inquiry, Tel: 021-59222288

API Globe Valve
API截止阀

J41H-CL150/CL300/CL600

结构特点与用途 Structural Features and Uses

该产品严格按API标准进行设计、制造和验收，结构紧凑、密封可靠、操作灵活，适用于石油化工、电力、冶金、纺织等工业部门。
The product is designed and manufactured in strict accordance with API standards, compact structure, reliable sealing, flexible operation, suitable for petrochemical, power, metallurgy, textile and other industrial sectors

试验压力 Test Pressure

试验压力(mpa) Test Pressure		公称压力PN(LB)		
		150LB	300LB	600LB
壳体强度试验 Shell strength test	水 Water	3.1	7.8	15
高压密封试验 High pressure sealing test		2.2	5.6	11
上密封试验 On the seal test		2.2	5.6	11
低压密封试验 Low pressure seal test	空气 Gas	0.5~0.7		

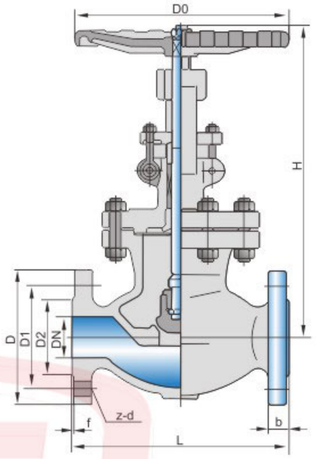

主要零件材料 Material Formain Parts

阀体材料 Body material	WCB(C)	CF8(P)	CF8M(R)	WC6, WC9(V)	CF3(P)	CF3M(R)
工作温度(°C) working temp	≤425	≤275	≤275	≤550	≤200	≤200
适用介质 Applicable media	水、蒸汽、油品 Water, steam, oil	硝酸类 Nitric acid	醋酸类 Acetic acid	水、蒸汽 Water, steam	酸碱 Acid and alkali	酸碱 Acid and alkali

主要外形尺寸和连接尺寸 Main Dimensions and Connection Dimensions

公称通径NPS in	mm	单位 unit	L	D	D1	D2	b	f	z-d	D0	H	重量WT(kg)
CL150												
2"	50	in	8.00	6.00	4.75	3.62	0.75	0.06	4-0.75	7.09	13.78	24
		mm	203	152	120.7	92	19.5	1.6	4-19	180	350	
3"	80	in	9.5	7.50	6.00	5.00	0.94	0.06	4-0.75	11.02	15.91	38
		mm	241	190.5	152.5	127	24	1.6	4-19	280	404	
4"	100	in	11.50	9.00	7.50	6.19	0.94	0.06	8-0.75	11.02	17.87	54
		mm	292	229	190.5	157	24	1.6	8-19	280	454	
6"	150	in	16.00	11.00	9.50	8.50	1.00	0.06	8-0.88	12.60	19.33	104
		mm	406	279	241.5	216	25.5	1.6	8-22.5	320	491	
8"	200	in	19.50	13.50	11.75	10.62	1.12	0.06	8-0.88	14.17	21.54	133
		mm	495	343	298.5	270	29	1.6	8-22.5	360	547	
CL300												
2"	50	in	10.50	6.50	5.00	3.62	0.88	0.06	8-0.75	7.78	16.30	34
		mm	267	165	127	92	22.5	1.6	8-19	200	414	
2 1/2"	65	in	11.50	7.50	5.88	4.12	1.00	0.06	8-0.88	9.45	18.35	46
		mm	292	190.5	149.3	1.5	25.5	1.6	8-22.5	240	466	
3"	80	in	12.50	8.25	6.62	5.00	1.12	0.06	8-0.88	11.02	18.35	56
		mm	318	210	168	127	29	1.6	8-22.5	280	466	
4"	100	in	14.00	10.00	7.88	6.19	1.25	0.06	8-0.88	12.60	20.79	80
		mm	356	254	200	157	32	1.6	8-22.5	320	528	
6"	150	in	17.50	12.50	10.62	8.50	1.44	0.06	12-0.88	17.32	26.70	154
		mm	445	317.5	269.7	216	37	1.6	12-22.5	440	678	
CL600												
2"	50	in	11.5	6.5	5	3.62	1	1	8-87	9.78	16.93	32
		mm	292	165	127	92.1	26	26	8-20	250	430	
3"	80	in	14	8.25	6.62	5	1.25	1.25	8-0.97	14	20.87	60
		mm	356	210	168.3	127	32	32	8-23	355	530	
4"	100	in	17	10.75	8.5	6.18	1.5	1.5	8-1.00	17.75	25.56	100
		mm	432	273	216	157.2	38.1	38.1	8-25	450	650	
6"	150	in	22.00	14.00	11.50	8.5	1.87	1.87	12-1.12	22.00	33.43	190
		mm	559	356	292	216	48	48	12-29	560	850	
8"	200	in	26.00	16.50	13.75	10.62	2.18	2.18	12-1.25	24.81	41.31	310
		mm	660	419	350	27	55.6	55.6	12-32	630	1050	

New Generation of Butt Welding Globe Valve
换代型对焊式截止阀

SGJ61H-16, 25, 40, 64, 100P, R, C, I, V

说明 Description

SGJ61H系列截止阀为本厂在广泛调研基础上，应广大用户要求独立开发而成的具有独立知识产权产品。可广泛替代原J41H系列截止阀。具有启闭迅捷、密封可靠、寿命长、重量轻、铸件工艺性好以及安装不需法兰、管件、垫片，并减少两个泄漏点等一系列优点，可最大限度地满足各类用户的节能降耗、降本增盈及环保要求。

SGJ61H series of valve for the factory in the extensive research on the basis of the vast number of users should be independently developed from the independent intellectual property products. Can replace the original J41H series of cut-off valve. It has a series of advantages such as opening and closing fastness, reliable sealing, long life, light weight, good casting process and no flanges, fittings, gasket and two leakage points. It can meet the needs of all kinds of users Energy saving, cost reduction and environmental protection requirements.

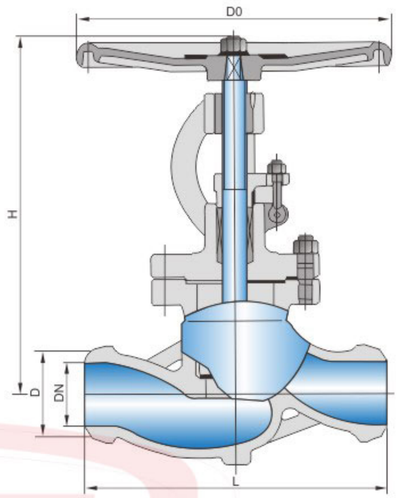

试验压力 Test Pressure

压力(MPa) pressure	试验压力(MPa) test pressure	
	强度 strength	密封 Sealing
1.6	2.4	1.76
2.5	3.8	2.75
4.0	6	4.4
6.4	9.6	7.4
10	15	11

壳体材料 Shell Material

代号 Code	C	P		R		V(I)	
材料 material	25或WCB	CF8 304	CF3 304L	CF8M 316	CF3M 316L	WC6	WC9
工作温度(°C) working temp	425°C	200°C		200°C		552°C	593°C
适用介质 Applicable media	水、汽、油品等 Water, steam, oil etc.	硝酸等腐蚀性介质 HNO3 and other corrosive medium	强氧化性介质 Strong oxidizing medium	醋酸等 Acetic acid etc.	尿素等 Urea etc.	水、汽、油品等 Water, steam,oil etc.	

主要外形尺寸和连接尺寸 Main Dimensions and Connection Dimensions

PN16,25

DN	D	L	H	D0
15	25	130	236	120
20	29	150	242	120
25	32	160	280	160
32	45	180	290	160
40	60	200	330	200
50	78	230	350	240
65	90	290	400	280
80	110	310	430	320
100	136	350	465	360
125	164	400	526	400
150	190	480	605	400

PN40

DN	D	L	H	D0
15	25	130	236	120
20	29	150	242	120
25	36	160	281	120
32	46	180	290	160
40	65	200	330	200
50	79	230	350	240
65	90	290	400	280
80	110	310	430	320
100	135	350	465	360
125	164	400	526	400
150	190	480	620	450

PN64,100

DN	D	L	H	D0
15	29	170	195	100
20	32	190	228	120
25	38	210	250	160
32	48	230	326	200
40	70	260	359	240
50	79	300	418	280
65	90	340	448	320
80	110	380	519	400
100	138	430	630	450
125	168	500	660	480
150	195	550	683	500

注：如有产品参数疑问请致电上海电站阀门有限公司详询，电话：021-59222288
Note: If the product parameters, please call our company detailed inquiry, Tel: 021-59222288

API Cryogenic Globe Valve
API低温截止阀

DJ41Y-CL150/CL600

执行标准 Implementation Standards

项目 project	结构长度 Structure length	法兰标准 Flange standard
标准 standard	ANSI B16.10	ANSI B16.15

主要零件材料 Material Formain Parts

零件名称 Part name	阀体、阀盖 Body, bonnet	阀杆、阀瓣 stem, disc	填料 Packing	支架 Yoke
材料 Material	A352-LCB A352-LC3 A351-CF8	A182-F304	聚四氟乙烯 PTFE	A216-WCB

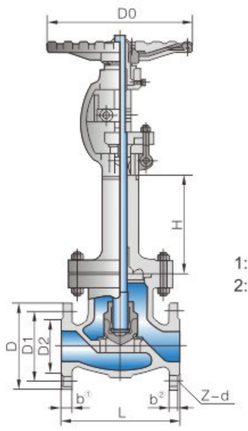

1: 为150~300磅级法兰尺寸
2: 为600磅级法兰尺寸

主要零件材料 Material Formain Parts

型号 Model	公称压力 PN(Lb)	常温试验压力P2(MPa) Normal temperature test pressure			低温密封试验压力 (MPa) Low temp seal test pressure	工作温度及适用介质 working temperature and applicable media		
		壳体 shell	密封(气) Seal(gas)	上密封 Back seal test				
DZ41Y-CL150	150	3.0	0.6	2.2	0.6	-46°C 氨/液氨/ 丙烷 NH3/LN2/C3H8	-101°C 乙烯/ 二氧化碳 ethylene/CO2	-196°C 甲烷/液化 天然气 CH4/LNG
DZ41Y-CL600	600	15	0.6	11	0.6			

主要外形尺寸和连接尺寸 Main Dimensions and Connection Dimensions

公称通径NPS		主要外形尺寸及连接尺寸(mm) Main dimensions and connection dimensions									
in	mm	L	D	D1	D2	b	z-d	D0	H		
									-46°C	-101°C	-196°C
DJ41Y-CL150											
2	50	203	152	120.5	95	16	4-19	224	110	130	170
3	80	241	190	152.5	127	19	4-19	250	120	150	190
4	100	292	229	190.5	157	24	8-19	350	130	160	200
5	125	356	254	216	186	24	8-22	350	130	160	200
6	150	406	279	241.5	216	26	8-22	355	140	170	220
8	200	495	343	298.6	270	29	8-22	400	140	170	220
DJ41Y-CL600											
2	50	292	165	127	92	26	8-19	250	110	130	170
3	80	356	210	168	127	32	8-22	400	120	150	190
4	100	432	273	216	157	38	8-25	400	130	160	200
5	125	508	330	266.5	186	45	8-29	400	130	160	200
6	150	559	356	282	216	48	12-29	560	140	170	220
8	200	660	419	349	270	56	12-32	630	140	170	220

Lift Check Valve
升降式止回阀

H41H/Y/W-2.5, 4.0, 6.4, 10.0

主要性能规范 Main Performance Specifications

试验压力(MPa) Test pressure	公称压力PN(MPa)			
	2.5	4.0	6.4	10.0
壳体强度试验 Shell strength test	3.75	6.0	9.6	15.0
密封试验(液) Seal test (hydraulic)	2.75	4.4	7.0	11.0
密封试验(气) Seal test (gas)	0.5-0.7			
适用介质 Applicable medium	C 水/油品/蒸汽 Water/oil/steam	P 硝酸类 NHO3	R 醋酸类 Acetic acid	I 空气、水 gas, water
适用温度(°C) Applicable temp	<425	<200	<200	≤550

结构长度：GB12221-89 法兰标准：JB79
Structure length: GB12221-89 Flange Standard: JB79

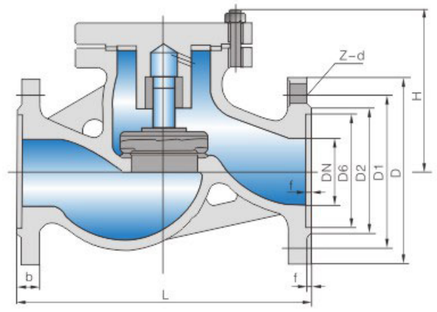

主要零件材料 Material Formain Parts

产品类型 Product type	零件名称 Part name			
	阀体、阀盖 Body, bonnet	阀瓣、阀座 Disc, seat	垫片 Gasket	紧固件 Fastener
H41Y(C型)	WCB或25 WCB or 25	H: 25+铬不锈钢 Cr stainless steel Y: 25+硬质合金 Carbide	不锈钢-柔性石墨 钢带石棉绕式垫片 缠绕垫片 Stainless-Flexible graphite Steel asbestos wound gasket wound gasket	优质碳钢 Carbon steel
H41Y(I型)	铬钼钢 Cr-Mo steel	铬钼钢+硬质合金 Cr.Mo steel+Carbide		合金钢 Alloy steel
H41Y(P型) H41W(R型)	铬镍钛不锈钢 Cr-Ni-Ti stainless steel			不锈钢 Stainless steel

主要外形尺寸和连接尺寸 Main Dimensions and Connection Dimensions

公称通径 DN(mm)	主要外形尺寸及连接尺寸(mm) Main dimensions and connection dimensions							
	L	H	D	D1	D2	b	f	z-d
H41H/Y/W-25								
15	130	100	95	65	45	16	2	4-14
20	150	105	105	75	55	16	2	4-14
25	160	120	115	85	65	16	2	4-14
32	180	130	135	100	78	18	2	4-18
40	200	135	145	110	85	18	3	4-18
50	230	149	160	125	100	20	3	4-18
80	310	169	195	160	135	22	3	8-18
100	350	194	230	190	160	24	3	8-23
150	480	255	300	250	218	30	3	8-25
200	600	305	360	310	278	34	3	12-25

Lift Check Valve
升降式止回阀

H41H/Y/W-2.5, 4.0, 6.4, 10.0

主要外形尺寸和连接尺寸 Main Dimensions and Connection Dimensions

公称通径 DN(mm)	主要外形尺寸及连接尺寸(mm) Main dimensions and connection dimensions									
	L	H	D	D1	D2	D6	b	f	f2	z-d
					H41H/Y/W-40					
15	130	100	95	65	45	40	16	2	4	4-14
20	150	105	105	75	55	51	16	2	4	4-14
25	160	120	115	85	65	58	16	2	4	4-14
32	180	130	135	100	78	66	18	2	4	4-18
40	200	135	145	110	85	76	18	2	4	4-18
50	230	149	160	125	100	88	20	3	4	4-18
80	310	169	195	160	135	121	22	3	4	8-18
100	350	194	230	190	160	150	24	3	4.5	8-23
150	480	255	300	250	218	204	30	3	4.5	8-25
200	600	305	375	320	282	260	38	3	4.5	12-30
					H41H/Y/W-64					
15	210	100	105	75	55	40	18	2	4	4-14
20	230	110	125	90	68	51	20	2	4	4-18
25	230	125	135	100	78	58	22	2	4	4-18
32	260	140	150	110	82	66	24	2	4	4-23
40	260	168	165	125	95	76	24	3	4	4-23
50	300	170	175	135	105	88	26	3	4	4-23
80	380	205	210	170	140	121	30	3	4	8-23
100	430	230	250	200	168	150	32	3	4.5	8-25
150	550	265	340	280	240	204	38	3	4.5	8-34
200	650	310	405	345	300	260	44	3	4.5	12-34
					H41H/Y/W-100					
15	210	100	105	75	55	40	20	2	4	4-14
20	230	110	125	90	68	51	22	2	4	4-18
25	230	125	135	100	78	58	24	2	4	4-18
32	260	140	150	110	82	66	24	2	4	4-23
40	260	168	165	125	95	76	26	3	4	4-23
50	300	170	195	145	112	88	28	3	4	4-25
80	380	205	230	180	148	121	34	3	4	8-25
100	430	230	265	210	172	150	38	3	4.5	8-30
150	550	265	3540	290	250	204	46	3	4.5	12-34
200	650	310	430	360	312	260	54	3	4.5	12-41

Swing Check Valves
旋启式止回阀

H44H/Y/W-2.5, 4.0, 6.4

主要性能规范 Main Performance Specifications

试验压力(MPa) test pressure	公称压力PN(MPa)			
	2.5	4.0	6.4	10.0
壳体强度试验 Shell strength test	3.75	6.0	9.6	15.0
密封试验(液) Seal test (hydraulic)	2.75	4.4	7.0	11.0
密封试验(气) Seal test (gas)	0.5-0.7			
适用介质 Applicable medium	C	P	R	I
	水/油品/蒸汽 Water/oil/steam	硝酸类 NHO3	醋酸类 Acetic acid	空气、水 gas, water
适用温度(°C) Applicable temp	<425	<200	<200	≤550

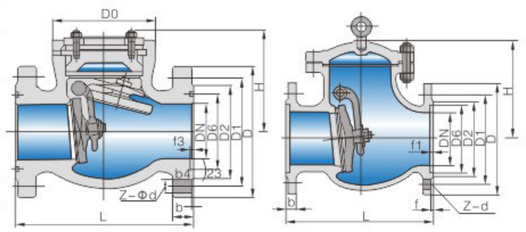

结构长度：GB12221-89 法兰标准：JB79 Structure length: GB12221-89 Flange Standard: JB79

主要外形尺寸和连接尺寸 Main Dimensions and Connection Dimensions

公称通径 DN(mm)	主要外形尺寸及连接尺寸(mm) Main dimensions and connection dimensions									
	L	H	D	D1	D2	D6	b	f	f2	z-d
					H44H/Y/W-25					
50	230	160	160	125	100		20	3		4-18
65	290	175	180	145	120		22	3		8-18
80	310	185	195	160	135		22	3		8-18
100	350	220	230	190	160		24	3		8-23
125	400	248	270	220	188		28	3		8-25
150	480	276	300	250	218		30	3		8-25
200	550	350	360	310	278		34	3		12-25
250	650	410	425	370	332		36	3		12-30
300	750	430	485	430	390		40	4		16-30
350	850	518	550	490	448		44	4		16-34
400	950	560	610	550	505		48	4		16-34
500	1150	618	730	660	610		52	4		20-41
					H44H/Y/W-40					
50	230	169	160	125	100	88	20	3	4	4-18
65	290	173	180	145	120	110	22	3	4	8-18
80	310	185	195	160	135	121	22	3	4	8-18
100	350	220	230	190	160	150	24	3	4.5	8-23
125	400	248	270	220	188	176	28	3	4.5	8-25
150	480	270	300	250	218	204	30	3	4.5	8-25
200	550	342	375	320	282	260	38	3	4.5	12-30
250	650	401	445	385	345	313	42	3	4.5	12-34
300	750	423	510	450	408	364	46	4	4.5	16-34
350	850	455	570	510	465	422	52	4	5	16-34
400	950	510	655	585	535	474	58	4	5	16-41
					H44H/Y/W-64					
50	300	177	175	135	105	88	26	3	4	4-23
65	340	197	200	160	130	110	28	3	4	8-23
80	380	212	210	170	140	121	30	3	4	8-23
100	430	248	250	200	168	150	32	3	4.5	8-25
125	500	296	295	240	202	176	36	3	4.5	8-30
150	550	330	340	280	240	204	38	3	4.5	8-34
200	650	385	405	345	300	260	44	3	4.5	12-34
250	775	445	470	400	352	313	48	3	4.5	12-41
300	900	474	530	460	412	364	54	4	4.5	16-41
350	1025	514	595	525	475	422	60	4	5	16-41
400	1150	616	670	585	525	474	66	4	5	16-48

H41H/Y/W-10.0, 16.0, 20.0, 25.0

主要外形尺寸和连接尺寸 Main Dimensions and Connection Dimensions

公称通径 DN(mm)	主要外形尺寸及连接尺寸(mm) Main dimensions and connection dimensions									
	L	H	D	D1	D2	D6	b	f	f2	z-d
					H44H/Y/W-100					
50	300	210	195	145	112	88	28	3	4	4-25
65	340	227	220	170	138	110	32	3	4	8-25
80	380	235	230	180	148	121	34	3	4	8-25
100	430	274	265	210	172	150	38	3	4.5	8-30
125	500	307	310	250	210	176	42	3	4.5	8-34
150	550	347	350	290	250	204	46	3	4.5	12-34
200	650	402	430	360	312	260	54	3	4.5	12-41
250	775	432	500	430	382	313	60	3	4.5	12-41
300	900	484	585	500	442	364	70	4	4.5	16-48
					H44H/Y/W-160					
50	300	210	215	165	132	188	36	3	4	8-25
65	340	227	245	190	152	110	44	3	4	8-30
80	380	235	260	205	168	121	46	3	4.5	8-30
100	430	274	300	240	200	150	48	3	4.5	8-34
150	550	340	390	318	270	205	66	3	4.5	12-41
200	650	374	480	400	345	250	78	3	4.5	12-48
250	775	440	580	485	425	313	88	3	4.5	12-54
300	900	505	665	570	510	364	100	3	4 5	16-54

公称通径 DN(mm)	主要外形尺寸及连接尺寸(mm)(JB79) Main dimensions and connection dimensions								
	L	D	D1	D2	D6	b	f	z-d	H
				H44H/Y/W-200					
50	300	210	160	128	70	40	3	8-Φ25	120
65	340	260	203	165	97	48	3	8-Φ30	190
80	380	290	230	190	116	54	3	8-Φ34	210
100	430	360	292	245	138	66	3	8-Φ41	240
150	550	440	360	305	190	82	3	12-Φ48	343
200	650	535	440	380	245	92	3	12-Φ48	320
250	775	670	572	508	319	110	3	16-Φ48	380

公称通径 DN(mm)	主要外形尺寸及连接尺寸(mm)(GB9113.25) Main dimensions and connection dimensions										
	L	D	D1	D2	D8	b	b4	f	f3	z-d	H
						H44H/Y/W-250					
50	300	215	165	124	95	38	12	8	8	8-Φ26	220
65	340	245	190	137	108	41	12	8	8	8-Φ30	230
80	380	270	203	168	137	48	12	8	8	8-Φ33	245
100	430	310	241	194	162	54	12	8	8	8-Φ36	280
150	550	395	318	248	211	83	13	9.5	9.5	12-Φ39	340
200	650	485	394	318	270	92	17	11	11	12-Φ45	360
250	775	585	483	371	324	108	17	11	11	12-Φ52	395
300	900	675	571	438	381	124	23	14	14	16-Φ56	478

试验压力 Test Pressure

试验压力(MPa) Test Pressure	公称压力PN(LB)		
	150LB	300LB	400LB
壳体强度试验 Shell strength test	3.1	7.8	10.3
密封试验 Seal test	2.2	5.6	7.6

主要零件材料 Material Formain Parts

阀体材料 Body material	WCB(C)	CF8(P)	CF8M(R)	WC6, WC9(V)
工作温度(°C) Working temp	≤425	≤100	≤100	≤550
适用介质 Applicable media	水、蒸汽、油品 Water, steam, oil	硝酸类 Nitric acid	醋酸类 acetic acid	水、蒸汽 water, steam

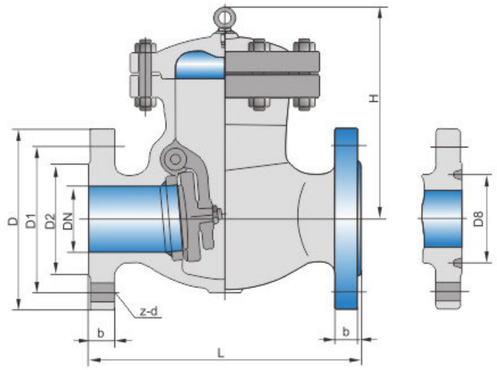

b 150lb 300LB 400LB磅级法兰尺寸
b° 600LB磅级法兰尺寸

制造验收技术标准 Manufacturing Acceptance Technical Standards

设计制造：ANSI B16.34
结构长度：ANSI B16.5
检验与试验：API 598, API 6D

Design and manufacture: ANSI B16.34
Structure Length: ANSI B16.5
Inspection and Testing: API 598, API 6D

主要外形尺寸和连接尺寸 Main Dimensions and Connection Dimensions

公称通径NPS		单位 unit	L	D	D1	D2	b	z-Φd	H	重量WT(kg)
mm	in									
					CL150					
2"	50	in	9.00	6.00	4.75	3.62	0.75	4-0.75	6.34	16.6
		mm	203	157	120.7	92	19.5	4-19	161	
2 1/2"	65	in	8.50	7.00	5.50	4.12	0.88	4-0.75	7.08	22.5
		mm	216	178	139.7	105	22.5	4-19	180	
3"	80	in	9.50	7.50	6.00	5.00	0.94	4-0.75	7.48	32.5
		mm	241	190.5	152.4	127	24	4-19	190	
4"	100	in	11.50	9.00	7.50	6.19	0.94	8-0.75	8.66	53.8
		mm	292	229	190.5	157.2	24	8-19	220	
6"	150	in	14.00	11.0	9.50	8.50	1.00	4-0.88	10.12	83.8
		mm	356	279	241.5	216	25.5	8-22.5	257	
8"	200	in	19.50	13.50	11.75	10.62	1.12	8-0.88	11.50	141.3
		mm	495	343	298.5	270	29	8-22.5	292	
10"	250	in	24.5	16.00	14.25	12.75	1.19	12-1.00	13.78	190.5
		mm	622	406	362	324	30.5	12-25	350	
12"	300	in	27.50	19.00	17.00	15.00	1.25	12-1.00	15.60	292
		mm	699	483	432	381	32	12-25	398	

API Swing Check Valves
API旋启式止回阀

主要外形尺寸和连接尺寸 Main Dimensions and Connection Dimensions

公称通径NPS mm	公称通径NPS in	单位 unit	L	D	D1	D2	b	z-Φd	H	重量WT(kg)
CL300										
2"	50	in	10.50	6.5	5.0	3.62	0.88	8-0.75	7.06	21
		mm	267	165	127	92	22.5	8-19	179.5	
3"	80	in	12.50	8.25	6.62	5.00	1.12	8-0.88	8.36	47
		mm	318	210	168	127	29.0	8-22.5	212.4	
4"	100	in	14.00	10.00	7.88	6.19	1.25	8-0.88	9.69	69
		mm	356	254	200	157	32.0	8-22.5	246	
6"	150	in	17.50	12.50	10.62	8.50	1.44	12-0.88	11.50	133
		mm	445	317.5	269.7	216	37.0	12-22.5	292	
8"	200	in	21.00	15.00	13.00	10.62	1.62	12-1.00	12.91	165.5
		mm	533	381	330	270	41.5	12-25.5	328	
10"	250	in	24.50	17.50	15.25	12.75	1.88	16-1.12	14.9	208
		mm	622	444.50	387	324	48.0	16-28.5	378.6	
12"	300	in	28.00	20.50	17.75	15.00	2.00	16-1.25	16.53	296
		mm	711	521	451	381	51.0	16-32	420	
CL400										
2"	50	in	11.50	6.50	5.00	3.62	1.00	8-0.75	7.55	26
		mm	292	165	127	92	25.5	8-19	192	
3"	80	in	14.00	8.25	6.62	5.00	1.25	8-0.88	8.66	53
		mm	356	210	168	127	32	8-22.5	220	
4"	100	in	16.00	10.00	7.88	6.19	1.38	8-1.00	9.64	72
		mm	406	254	200	157	35	8-25.5	245	
6"	150	in	19.50	12.50	10.62	8.50	1.62	12-1.00	11.61	136.5
		mm	495	317.5	270	10.62	41.5	12-25.5	295	
8"	200	in	23.50	15.00	13.00	216	1.88	12-1.12	12.99	207.3
		mm	597	381	330	270	48	12-28.5	330	
10"	250	in	26.50	17.50	15.52	12.75	2.12	16-1.25	14.96	300.9
		mm	673	445	387	324	54	16-32	380	
12"	300	in	30.00	20.50	17.75	15.00	2.25	16-1.38	16.73	390
		mm	762	520	450.8	381	57.5	16-35	425	

主要外形尺寸和连接尺寸 Main Dimensions and Connection Dimensions

公称通径NPS mm	公称通径NPS in	单位 unit	L	D	D1	D8	D2	b	z-Φd	H	重量WT(kg)
CL600											
2"	50	in	11.61	6.50	5.0	425	3.25	0.98	8-0.75	7.99	34
		mm	295	165	127.0	108	82.6	25	8-19	203	
3"	80	in	14.13	8.27	6.62	5.75	4.87	1.26	8-0.88	9.25	63
		mm	359	210	168.1	146	123.8	32	8-22	235	
4"	100	in	17.13	10.75	8.50	6.89	5.87	1.50	8-1.00	11.26	114
		mm	435	273	215.9	175	149.2	38	8-25	286	
6"	150	in	22.13	14.0	11.5	9.49	8.31	1.89	12-1.14	13.00	207
		mm	562	356	292.1	241	211.1	48	12-29	330	
8"	200	in	26.14	16.50	13.74	11.89	10.63	2.20	12-1.26	15.00	387
		mm	664	419	349.1	302	269.9	56	12-32	381	
10"	250	in	31.14	20.0	17.0	14.02	12.75	2.25	16-1.38	18.00	580
		mm	791	508	431.8	356	323.8	64	16-35	457	
12"	300	in	33.15	22.00	19.25	16.26	15.0	2.64	20-1.38	23.00	778
		mm	842	559	489	413	381.0	67	20-35	584	

注：如有产品参数疑问请致电上海电站阀门有限公司详询，电话：021-59222288
Note: If the product parameters, please call our company detailed inquiry, Tel: 021-59222288

API Cryogenic Swing Type Check Valve
API低温旋启式止回阀

执行标准 Implementation Standards

项目 project	设计及制造 Design and manufacture	结构长度 Structure length	法兰标准 Flange standard	检验和试验 Inspection and testing
标准 standard	API600	ANSI B16.10	ANSI B16.15	API598

主要零件材料 Material Formain Parts

零件名称 Part name	阀体、阀盖 阀瓣、摇杆 Body, bonnet, disc, rocker	销轴、螺母 Pin, nut	双头螺栓 Studs	密封面 Sealing surface	填料 Packing
材料 material	A352-LCB A352-LC3 A351-CF8	A182-F304	Cr-Mo钢 Cr-Mo steel	钴基合金 Cobalt based alloys	聚四氟乙烯 PTFE

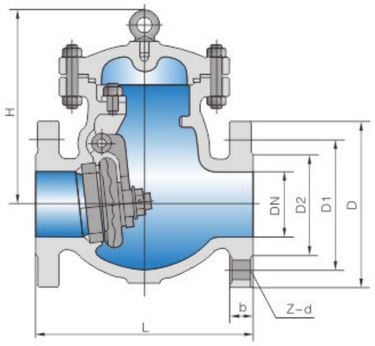

主要零件材料 Material Formain Parts

型号 Model	公称压力 PN(Lb)	常温试验压力P2(MPa) Normal temperature test pressure 壳体 Shell	常温试验压力P2(MPa) Normal temperature test pressure 密封(气) Seal(gas)	低温密封试验压力 (MPa) Low temp seal test pressure	工作温度及适用介质 Working temperature and applicable media		
DH44Y-150(Lb)	150	3.0	0.6	0.6	-46°C 氨/液氨/丙烷 NH3/LN2/C3H8	-101°C 乙烯/二氧化碳 Ethylene/CO2	-196°C 甲烷/液化天然气 CH4/LNG
DH44Y-300(Lb)	300	7.5	0.6	0.6			
DH44Y-600(Lb)	600	15	0.6	0.6			

主要外形尺寸和连接尺寸 Main Dimensions and Connection Dimensions

公称通径NPS in	公称通径NPS mm	主要外形尺寸及连接尺寸(mm) Main dimensions and connection dimensions d	L	D	D1	D2	b	H	z-d
DH44Y-CL150									
1 1/2	40	38	165	127	98.4	73	14.5	154	4-15
2	50	51	203	152	120.6	92	16	175	4-19
2 1/2	65	64	216	178	139.7	105	17.5	177	4-19
3	80	76	241	191	152.4	127	24	191	4-19
4	100	102	229	229	190.5	157	24	222	8-19
6	150	152	356	279	241.3	216	25.5	325	8-22
8	200	203	495	343	298.4	270	29	383	8-22
10	250	254	622	406	361.9	324	30.5	448	12-25
12	300	305	698	483	431.8	381	32	540	12-25
14	350	357	787	535	476.2	413	35	560	12-29
DH44Y-CL300									
1 1/2	40	38	241	156	114.3	73	21	172	4-22
2	50	51	267	165	127	92	22.5	198	8-19
2 1/2	65	64	292	191	149	105	25.5	204	8-22
3	80	76	318	210	168.3	127	29	222	8-22
4	100	102	356	254	200	157	32	277	8-22
6	150	152	445	318	269.9	216	37	346	12-22
8	200	203	533	381	330	270	42	412	12-25
10	250	254	622	445	387.5	324	48	465	16-29
12	300	305	711	520	451	381	51	562	16-32
DH44Y-CL600									
1 1/2	40	38	241	156	114.5	73	30	180	4-22
2	50	51	292	165	127	92	33	204	8-29
2 1/2	65	64	330	190	149	100	36	222	8-22
3	80	76	356	210	168	127	39	278	8-22
4	100	102	432	273	216	157	45	350	8-25
6	150	152	559	356	292	216	55	430	12-29
8	200	200	660	419	349	270	63	468	12-32
10	250	248	787	508	432	324	71	572	16-35
12	300	298	838	559	489	381	74	608	20-35

Electric Water Supply Control Valve
电动给水调节阀

T968Y 系列
T968Y Series

概述 Descriptions

给水调节阀又称抗气蚀、低噪声、高压差调节阀，是我厂工程技术人员为满足50~600WM火力发电机组配套而开发的新型调节阀，该系列产品经过多次的改进，不断完善，具有新颖性和先进性，先后被评为“上海市新产品奖”、“中国新技术新产品博览会”金奖、“上海市高新技术产品”，是中国电力企业联合会认可的优先推广的专利产品。

Water supply control valve, also known as anti-cavitation, low noise, high pressure differential valve, is our factory engineering and technical personnel to meet the 50~600WM supporting the development of thermal power units and the new control valve, the series of products after repeated improvements, continuous improvement , Has novelty and advanced, has been rated as "Shanghai New Product Award", "China New Technology New Products Expo" Gold Award, "Shanghai High-tech Products", China Power Enterprises Federation recognized the priority to promote the patent product.

用途 Use

安装在电厂锅炉给水管道上作流量调节用。
Installed in the power plant boiler feed pipe for flow control.

技术规范 Specifications

公称压力: PN250~320
公称通径: DN50~300
工作温度: ≤300°C
适用介质: 锅炉给水
连接方式: 对焊
特性曲线: 线性、等百分比
额定流量系数Kv值或额定流量：按用户提供的实际工艺参数设计、制造
驱动方式: 电动(直行程、角行程)

Nominal pressure: PN25~32
Nominal diameter: DN50~300mm
Operating temperature: ≤300°C
Suitable medium: boiler feed water.
Connection: Butt welding.
Characteristic curve: linear, equal percentage.
Rated flow coefficient Kv value or rated flow: According to the actual process parameters provided by the user design, manufacture.
Manipulation methods: electric (straight stroke, angular stroke).

结构特点 Structural Features

1. 本系列产品采用完全拆装式结构，阀腔内件(包括阀座、阀芯、节流组件、密封件等)，均可从阀腔内取出，维护保养十分方便。阀体不需从管道上割下，可长期使用。
2. 阀芯为柱塞体平衡式结构，操纵力矩小，调节灵敏度高。
3. 节流组件由多孔板集流式节流环与套筒式节流套组成，且配以均流罩，因之具有小流量高压差无汽蚀、大流量调节性能好、流体排出梳流无噪音的综合特性，完全满足了锅炉给水工况的要求，有效地实现了高温、高压差流体的流量调节控制。可调性能好、调节精度高。
4. 节流环可在阀门工作行程的55%之内，实现多级减压节流。
5. 阀芯和阀座密封面堆焊司太立硬质合金，抗冲刷、耐蚀。
6. 阀门的固有流量特性曲线有两种：线性或等百分比。阀门在关闭状态下，"0"开度时，泄漏量为零。

1. This series of products with a completely removable structure, the valve cavity (including the valve seat, the valve core, throttling components, seals, etc.) can be taken out of the valve cavity, maintenance is very convenient. Valve body without cutting from the pipe, long-term use.
2. The spool is a plunger body balanced structure, low operating torque, high adjustment sensitivity.
3. Throttle assembly consists of perforated plate manifold flow restrictor and sleeve thimble, and with a flow hood, which has a small flow of high pressure differential cavitation, good performance of large flow regulation, fluid discharge comb Flow noise-free integrated features, fully meet the requirements of the boiler feed conditions, and effectively achieve high temperature, high pressure fluid flow control. Adjustable performance, high regulation accuracy.
4. The throttle ring can work within 55% of the valve stroke, to achieve multi-stage decompression throttling.
5. Spool valve seat and valve sealing surface too hard alloy Division, anti-erosion, corrosion.
6. There are two valve inherent flow characteristics: linear or equal percentage. Valve in the closed state, "0" opening, the amount of leakage is zero.

Electric Water Supply Control Valve
电动给水调节阀

T968Y 系列
T968Y Series

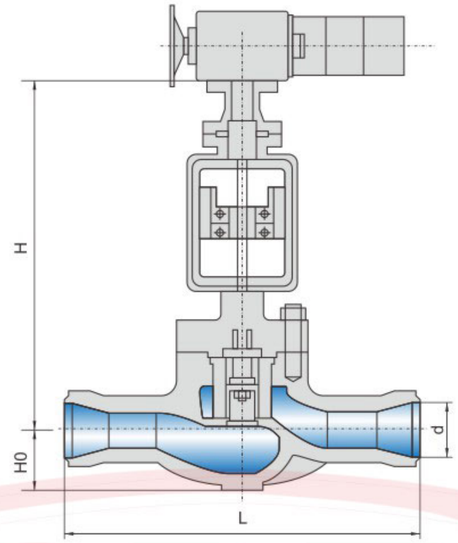

主要外形尺寸和连接尺寸 Main Dimensions and Connection Dimensions

型号 Model	公称通径DN	d	L	H	H0
T968Y-250/320 I	50	50	400	710	120
	65	65	400	710	120
	80	80	550	875	170
	100	100	500	870	150
T968Y-250/320	175	169	850	870	150
	225	223	800	1060	265
	250	250	1400	1180	265
	300	284	1400	1180	265

注：尺寸d按用户的管径参数配制，如果用户有特殊要求，可在合同中注明。
Note: The size d according to the user's diameter parameter preparation, if the user has special requirements, can be specified in the contract.

主要零件材料 Main Part Material

零件名称	材料牌号	Part Name	Material grades
阀体主体	WCB, 25, 20CrMo	Body	WCB, 25, 20CrMo
阀体焊接端	25, 20	Body welding end	25, 20
阀座	2Cr13	Seat	2Cr13
阀芯	2Cr13	Spool	2Cr13
节流组件	2Cr13	Throttle components	2Cr13
阀盖	WCB, 25, 20CrMo	Cap	WCB, 25, 20CrMo
阀杆	17-4PH, 38CrMoALA	Valve stem	17-4PH, 38CrMoALA
支架	WCB	Bracket	WCB

Oxygen Removal Valve
除氧器调节阀

TCY 系列
TCY Series

用途 Use

安装在汽、水管道上作流量调节用。
Installed in steam, water pipe for flow control.

技术规范 Specifications

公称压力: PN16, 25, 40, 64
公称通径: DN100~300
工作温度: ≤450°C
适用介质: 水、汽水两相流体
连接方式: 对焊、法兰
特性曲线: 线性、等百分比
流量系数Kv值或额定流量: 按用户提供的实际工艺参数设计、制造。
驱动方式: 电动

Nominal pressure: PN 1.6, 2.5, 4.0, 6.4
Nominal diameter: DN100 ~ 300mm
Operating temperature: ≤ 450 ° C
Applicable medium: water, soft drinks two-phase fluid.
Connection: Butt welding, flange.
Characteristic curve: linear, equal percentage.
Flow coefficient Kv value or rated flow: According to the actual process parameters provided by the user design, manufacture.
Manipulation method: electric.

结构特点 Structural Features

1. 阀门内腔采用拆装式结构，阀腔内件(包括阀座、节流套、阀芯、密封件等)可从阀腔内取出，进行检查、修复或更换，阀体不需从管道上割下，可多次使用。
2. 阀芯在节流套的约束下，作直行式运动，实现流量调节控制。
3. 节流套采用高铬不锈钢经硬化处理HRC≥45，抗汽蚀、耐冲刷，性能持久可靠。
4. 密封面堆焊司太立硬质合金，密封副经严格的精细加工，"0"开度时，泄漏量为零，且使用寿命长。

1. Valve cavity with removable structure, the valve cavity parts (including the valve seat, throttling sets, spools, seals, etc.) can be removed from the valve cavity, check, repair or replacement, the valve body without Pipe cut, can be used repeatedly.
2. Spool in throttling restraint, for straight-line movement, to achieve flow control.
3. Throttle sleeve made of high-chromium stainless steel hardened HRC ≥ 45, anti-cavitation erosion-resistant, durable and reliable performance.
4. Sealing surface welding Secretary too legislation cemented carbide, sealing by strict precision machining, "0" opening, the amount of leakage is zero, and long service life.

Oxygen Removal Valve
除氧器调节阀

TCY 系列
TCY Series

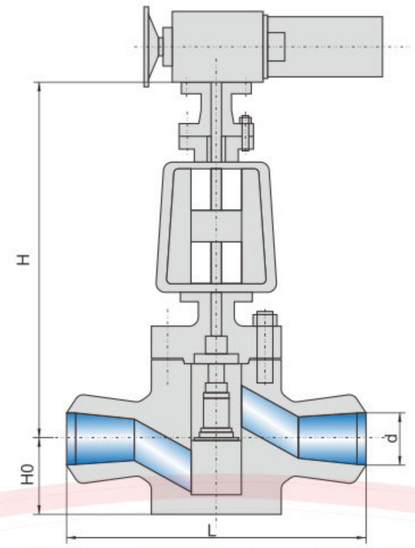

主要外形尺寸和连接尺寸 Main Dimensions and Connection Dimensions

型号 Model	公称通径DN	d	L	H	H0
TCY968Y-25/64	100	100	550	870	150
	150	150	670	910	180
	200	203	800	1060	265
	250	250	1400	1180	265
	300	284	1400	1180	265

注：1. 焊接式阀门的管端尺寸 d 按用户提供的管径参数制造。　　2. 法兰按国家标准制造，如用户有特殊要求，可在合同中注明。
Note: 1. Welded valve pipe end size d according to the user to provide the diameter of the manufacturing parameters.
2. Flange manufactured according to national standards, such as the user has special requirements, can be specified in the contract.

主要零件材料 Main Part Material

零件名称	材料牌号	Part Name	Material grades
阀体	WCB	Body	WCB
阀座	2Cr13	Seat	2Cr13
阀芯	2Cr13	Spool	2Cr13
阀盖	WCB	Cap	WCB
阀杆	17-4PH	Valve stem	17-4PH
支架	WCB	Bracket	WCB

Steam Pressure Regulating Valve
蒸汽减压调节阀

TQY 系列
TQY Series

用途 Use

安装在电厂锅炉系统供吹灰和燃油加热蒸汽管道上，作流量控制用。
Installed in the power plant boiler system for blowing ash and fuel heating steam pipe for flow control purposes.

技术规范 Specifications

公称压力: PN16, 25, 40, 160
公称通径: DN50, 80, 100
工作温度: ≤550°C
适用介质: 蒸汽
结构形式: 直通式、角式
连接方式: 对焊
驱动方式: 电动

Nominal pressure: PN16, 25, 40, 160
Nominal diameter: DN50, 80, 100
Working temperature: ≤550 ° C
Suitable medium: steam
Structure: Straight, angle
Connection: Butt welding
Drive mode: electric

结构特点 Structural Features

1. 本系列阀门为拆装式结构。阀腔内件(包括阀芯、阀座、减压组件)均可从阀腔内取出检查、修复或更换。
2. 根据工况特点，采用多孔梳流套筒式结构。这一新颖的结构变普通减压调节阀的一次降压为多次降压，并具有抗噪声，抗汽蚀功能。
3. 多孔梳流式套筒减压组件，由多层设有涡孔环槽的套筒组成，介质旋转均匀喷流，可调范围大，完全控制蒸汽流量和压力的大小。
4. 阀芯，阀座密封面堆焊司太立硬质合金，并进行热处理，密封无泄漏，使用寿命长。

1. This series of valves for the removable structure. Valve cavity parts (including the valve core, seat, decompression components) can be removed from the valve cavity inspection, repair or replacement.
2. According to the working conditions, the use of porous comb sleeve structure. This novel structure becomes a common decompression valve for a step-down multiple buck, and has anti-noise, anti-cavitation function.
3. Porous comb sleeve decompression assembly, composed of multi-layer sleeve with a vortex ring groove, medium uniform jet rotation, adjustable range, complete control of steam flow and pressure of the size.
4. Spool, seat sealing surface welding Secretary too Stanley cemented carbide, and heat treatment, sealing no leakage, long service life.

Steam Pressure Regulating Valve
蒸汽减压调节阀

TQY 系列
TQY Series

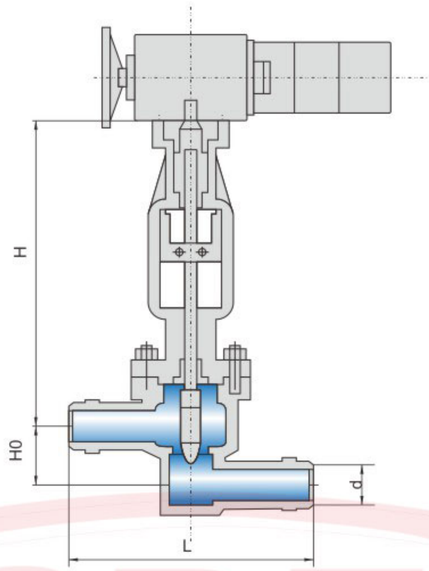

主要外形尺寸和连接尺寸 Main Dimensions and Connection Dimensions

直通式 Straight-through

型号 Model	公称通径DN	d	L	H	H0
TQY968Y-$\frac{25}{64}$I	50	48	400	710	120
	80	79	550	875	170
TQY968Y-160V	100	90	550	870	160

角式 Angle type

型号 Model	公称通径DN	d	L	H	H0
TQY963Y-$\frac{25}{64}$I	50	50	400	970	100

注：如果用户有特殊要求，可在合同中注明。
Note: if the user has special requirements, can be specified in the contract.

主要零件材料 Main Part Material

零件名称	材料牌号	Part Name	Material grades
阀体	20CrMo, 12Cr1MoVA	Body	20CrMo, 12Cr1MoVA
阀座	2Cr13, 1Cr18Ni9Ti	Seat	2Cr13, 1Cr18Ni9Ti
阀芯	2Cr13, 1Cr18Ni9Ti	Spool	2Cr13, 1Cr18Ni9Ti
阀盖	20CrMo, 12Cr1MoVA	Cap	20CrMo, 12Cr1MoVA
阀杆	17-4PH, 38Cr1MoVA	Valve stem	17-4PH, 38Cr1MoVA
支架	WCB	Bracket	WCB

Hydrophobic Control Valve
疏水调节阀

TS 系列
TS Series

用途 Use

安装在汽、水管道上或高低压加热器系统，做控制液位、调节流量用。
Installed in the steam, water pipes or high and low pressure heater system, to do the control level, adjust the flow.

技术规范 Specifications

公称压力: PN25, 64
公称通径: DN100~200
工作温度: ≤450°C
适用介质: 水
连接方式: 对焊、法兰
流量特性：线性、等百分比
流量系数Kv值或额定流量：按用户提供的实际工艺参数设计、制造。
驱动方式: 电动

Nominal pressure: PN25, 64
Nominal diameter: DN100~200
Operating temperature: ≤ 450°C
Suitable medium: water
Connection: Butt welding, flange
Flow characteristics: linear, equal percentage
Flow coefficient Kv value or rated flow: According to the actual process parameters provided by the user design, manufacture.
Drive mode: electric

结构特点 Structural Features

1. 本系列阀门采用拆装式结构，阀腔内件(包括阀座、节流罩、密封件等)，均可从阀腔内取出检修或更换，阀体不需从管道上割下，阀体可多次使用，经济合理。
2. 阀芯在节流罩内作直行动作，流量调节控制由节流罩窗孔或多孔螺旋涡流孔调节控制。控制水位，使之不得进入蒸汽系统，免于事故。
3. 阀芯、阀座密封面堆焊钴基硬质合金，密封效果好、使用寿命长。

1. This series of valve with removable structure, the valve cavity parts (including the valve seat, throttles, seals, etc.) can be removed from the valve cavity inspection or replacement, the valve body without cutting from the pipe, The valve body can be used more than once, economically and reasonably.
2. Spool in the throttle for direct action, flow control by the throttling window or porous spiral eddy current adjustment control. Control the water level to prevent it from entering the steam system and avoiding accidents.
3. Spool, seat sealing surface surfacing cobalt-based hard alloy, sealing effect, long service life.

Hydrophobic Control Valve
疏水调节阀

TS 系列
TS Series

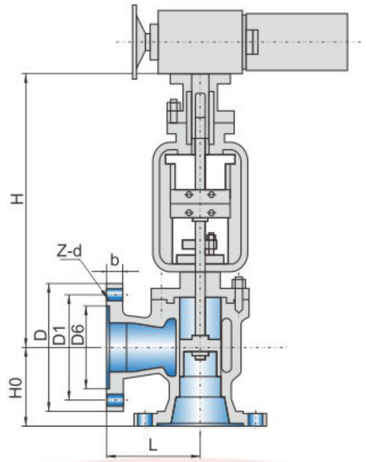

主要外形尺寸和连接尺寸 Main Dimensions and Connection Dimensions

角式 Angle type

型号 Model	公称通径DN	D	D1	D6	L	H	Z-d	f2	b
TS947Y-25	100	235	190	150	210	670	8-Φ22	4.5	24
	125	270	220	176	210	670	8-Φ25	4.5	28
	150	300	250	204	240	740	8-Φ25	4.5	30
	200	360	310	260	240	740	12-Φ25	4.5	34
TS947Y-64	100	250	200	150	210	670	8-Φ25	4.5	32
	125	295	240	176	210	670	8-Φ30	4.5	36
	150	345	280	204	240	740	8-Φ33	4.5	38
	200	415	345	260	240	740	12-Φ34	4.5	44

直通式 Straight-through

型号 Model	公称通径DN	d	L	H	H0
TS968Y-25/64	100	100	550	870	150
	125	125	670	910	180
	200	200	800	1060	265

注：如果用户有特殊要求，可在合同中注明。Note: if the user has special requirements, can be specified in the contract.

主要零件材料 Main Part Material

零件名称	材料牌号	Part Name	Material grades
阀体	WCB	Body	WCB
阀座	2Cr13	Seat	2Cr13
阀芯	2Cr13	Spool	2Cr13
节流罩	2Cr13	Throttle	2Cr13
阀盖	WCB	Cap	WCB
阀杆	17-4PH	Valve stem	17-4PH
支架	WCB	Bracket	WCB

TL 系列
TL Series

用途 Use

安装在锅炉给水泵旁路管道上，控制给水泵最小流量，使之免于汽蚀，保护水泵。
Installed in the boiler feed pump bypass pipe, to control the minimum flow to the pump to avoid cavitation, protect the pump.

技术规范 Specifications

公称压力: PN250~320
公称通径: DN50~80mm
工作温度: ≤300°C
适用介质: 水
连接方式: 对焊
流量特性: 线性、等百分比
流量系数Kv值或额定流量: 按用户提供的实际工艺参数设计、制造
驱动方式: 电动

Nominal pressure: PN250~320
Nominal diameter: DN50~80mm
Operating temperature: ≤300°C
Suitable medium: water
Connection: Butt welding
Flow characteristics: linear, equal percentage
Flow coefficient Kv value or rated flow: According to the actual process parameters provided by the user design, manufacture
Drive mode: electric

结构特点 Structural Features

1. 本系列阀门采用拆装式结构。阀腔内件(包括阀座、阀芯、节流环、均流罩等)均可从阀腔内取出检查、修复或更换。阀体不需从管道上割下，可多次使用。经济合理。
2. 阀芯采用平衡结构，不平衡力甚小，阀门动作精度高。
3. 阀门开度的40%以下，其流量由多级分流叠 板集成式节流组件来控制，具有多级降压和防空化的功能。
4. 均流套不仅是阀芯作直行运动的定位套，还具有梳流、减压、消声的作用，经特殊的加工和热处理，HRC≥45，抗汽蚀，耐冲刷。
5. 阀芯与阀座的密封面堆焊硬质合金，使用寿命长。
6. 阀体的安装阀座的工作面(阀体与阀座接触的密封平面)堆焊铬镍不锈钢，以保证阀体多次使用的密封性。

1. This series of valves with removable structure. Valve cavity parts (including the valve seat, the valve core, throttle ring, shroud, etc.) can be removed from the valve cavity inspection, repair or replacement. The body does not need to be cut from the pipe and can be used multiple times. Economic and reasonable.
2. Spool with balanced structure, unbalanced force is very small, high precision valve action.
3. The valve opening of 40% or less, the flow from multi-level shunt pack integrated throttle control, with multi-stage buck and anti-cavitation function.
4. Flow sleeve is not only the spool for straight movement positioning sleeve, but also has a comb, decompression, muffler role, the special processing and heat treatment, HRC ≥ 45, anti-cavitation, erosion-resistant.
5 valve plug and seat sealing surface surfacing carbide, long service life.
6. Valve Body Installation The working surface of the valve seat (the sealing surface of the valve body in contact with the valve seat) is welded with chrome-nickel stainless steel to ensure the sealing performance of the valve body.

Recirculation Valve
再循环调节阀

TL 系列
TS Series

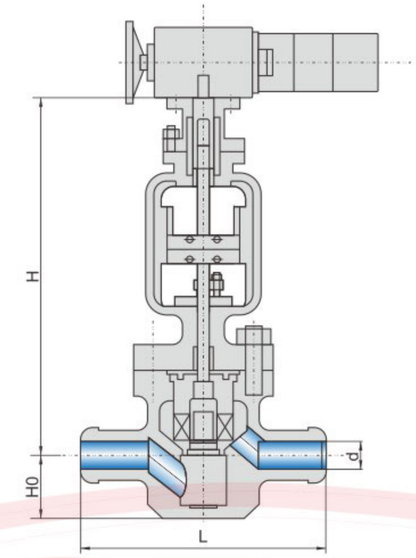

主要外形尺寸和连接尺寸 Main Dimensions and Connection Dimensions

型号 Model	公称通径DN	d	L	H	H0
TL968Y-250/320 I	50	50	400	710	120
	65	60	400	710	120
TL968Y-250/320	80	80	550	875	170

主要零件材料 Main Part Material

零件名称	材料牌号	Part Name	Material grades
阀体	25, 20CrMo	Body	25, 20CrMo
阀座	25, 20CrMo	Seat	25, 20CrMo
阀芯	2Cr13	Spool	2Cr13
阀盖	2Cr13	Cap	2Cr13
阀杆	17-4PH	Valve stem	17-4PH
支架	WCB	Bracket	WCB

附言 Postscript

如果工况允许，对流量调节要求不严格，仅作截止节流时，则用电动装置驱动为好。这样，阀门的关闭终端可调力矩，作到关得严、打得开、能节流；阀门也无虚关现象，使用寿命更长。

If conditions permit, the flow control requirements are not strict, only for cut-off when the throttle, then use the electric device to drive as well. In this way, the valve closing the end of adjustable torque, to be closed too strict, open to play, can throttle; valve also no virtual customs phenomenon, longer service life.